DIGITAL PROJECTION

HIGHlite Laser 3D Series

High Brightness Digital Video Projector

- INSTALLATION AND QUICK-START GUIDE
- CONNECTION GUIDE
- OPERATING GUIDE
- REFERENCE GUIDE

projectisle.com.au
Where Projectors Roam Free

Rev C February 2015
114-913C

About This Document

Follow the instructions in this manual carefully to ensure safe and long-lasting use of the projector.

Symbols used in this manual

Many pages in this document have a dedicated area for notes. The information in that area is accompanied by the following symbols:

WARNING: this symbol indicates that there is a danger of physical injury to yourself and/or damage to the equipment unless the instructions are closely followed.

ELECTRICAL WARNING: this symbol indicates that there is a danger of electrical shock unless the instructions are closely followed.

LASER WARNING: this symbol indicates that there is a potential hazard of eye exposure to laser radiation unless the instructions are closely followed.

NOTE: this symbol indicates that there is some important information that you should read.

Product revision

Because we at Digital Projection continually strive to improve our products, we may change specifications and designs, and add new features without prior notice.

Legal notice

Trademarks and trade names mentioned in this document remain the property of their respective owners.
Digital Projection disclaims any proprietary interest in trademarks and trade names other than its own.

Notes

Copyright © 2015 Digital Projection Ltd. All rights reserved.

Laser Information

Caution - use of controls or adjustments or performance of procedures other than those specified herein may result in hazardous radiation exposure.

Notes

Introduction

Congratulations on your purchase of this Digital Projection product.

Your projector has the following key features:

- Support for most 3D formats.
- HDBaseT® for transmission of uncompressed High Definition Video up to 100 m from the source.
- 3G-SDI with loop-through.
- Edge Blend.
- Blanking control for custom input window sizing.
- Cornerstone, Vertical & Horizontal Keystone, Pincushion & Barrel, and Image Rotation.
- Control via LAN and RS232.
- Motorised lens mount.

A serial number is located on the side of the projector. Record it here:

Notes

CONTENTS

INSTALLATION AND QUICK-START GUIDE 1

WHAT'S IN THE BOX? 3

CONNECTING THE POWER SUPPLY 4

PROJECTOR OVERVIEW 5

Front and rear views 5

Control panel 6

REMOTE CONTROL 7

Infrared reception 10

POSITIONING THE SCREEN AND PROJECTOR 11

Roll and pitch 12

CHANGING THE LENS 13

The lens hood 13

Inserting a new lens 14

Removing the lens 15

CHANGING THE FILTERS 16

OPERATING THE PROJECTOR 17

Switching the projector on 17

Switching the projector off 17

Selecting an input signal or test pattern 18

Input signal 18

Test pattern 18

Adjusting the lens 19

Lens menu 19

Remote control 19

Adjusting the image 20

Orientation 20

Keystone 20

Picture 20

CONNECTION GUIDE 21

SIGNAL INPUTS 23

Digital inputs and outputs 23

Analog inputs 24

EDID on the DVI and VGA inputs 25

Using HDMI/DVI switchers with the projector 25

3D connections 26

3D sources up to 60Hz requiring frame doubling and left/right interleaving 26

Frame sequential 3D sources up to 120Hz 26

Dual Pipe 3D 26

3D Sync 27

3D Sync in 27

3D Sync out 27

CONTROL CONNECTIONS 28

LAN connection examples 29

RS232 connection example 30

CONTENTS (continued)

OPERATING GUIDE 31

USING THE MENUS 33
- Opening the OSD 33
- Opening a menu 33
- Exiting menus and closing the OSD 33
- Inside a menu 34
  - *Accessing sub-menus* 34
  - *Executing commands* 34
- Editing projector settings 35
  - *Choosing a value from a list* 35
  - *Changing the value without viewing the list* 35
  - *Using a slider to set a value* 35

USING THE PROJECTOR 36
- Main menu 36
- Lens menu 37
  - *Lens Control* 37
  - *Lens Center* 37
- Image menu 38
  - *Brightness and Contrast* 38
  - *Gamma* 39
  - *Adaptive Contrast* 39
  - *Saturation, Hue, Sharpness and Noise Reduction* 39
  - *Position and Phase* 40
  - *Resync* 40
- Color menu 41
  - *Color Space* 41
  - *Color Temperature* 42
  - *Gamut* 43
  - *User Gamut* 44
  - *RGB Lift and Gain* 46
- Geometry menu 47
  - *Aspect Ratio* 47
  - *Overscan* 48
  - *Keystone* 49
  - *Rotation* 51
  - *Pincushion / Barrel* 52
  - *Corners* 53
  - *Reset* 54
  - *Blanking* 55
- Edge Blend menu 56
  - *Blend Width* 57
  - *Black Level Uplift* 58
- Possible Geometry and Edge Blend combinations 59
- 3D menu 60
  - *3D types* 61
  - *Some 3D settings explained* 62
  - *Frame rate multiplication in 3D images* 63
- Laser menu 64
- Setup menu 65
  - *Infrared Remote* 66
  - *Network* 67
  - *On Screen Display* 68
  - *Presets* 69
- Information menu 70
  - *Factory Reset* 70

CONTENTS (continued)

REFERENCE GUIDE 71

THE DMD™ 74

CHOOSING A LENS 76

Basic calculation 77

Basic calculation example 78

Full lens calculation 79

Introducing TRC 79

Calculating TRC 80

Calculating the throw ratio with TRC 81

Full lens calculation example 82

SCREEN REQUIREMENTS 83

Fitting the image to the DMD™ 83

WUXGA images displayed full width 83

WUXGA images displayed with a height of 1080 pixels 84

WUXGA images displayed full height 85

Diagonal screen sizes 86

Fitting the image to the screen 87

Positioning the screen and projector 88

POSITIONING THE IMAGE 89

Maximum offset range 91

ASPECT RATIOS EXPLAINED 92

Aspect ratio examples 93

FRAME RATES AND PULLDOWNS EXPLAINED 95

Interlaced and progressive scan 95

Frame rates of image sources 95

Pulldowns - conversion into destination formats 96

2:3 (normal) pulldown 96

2:3:3:2 (advanced) pulldown 97

APPENDIX A: LENS PART NUMBERS 98

APPENDIX B: LENS CHARTS 99

How to use the lens charts 99

TRC values applied in the charts 100

Full DMD™ width images 101

1.25:1 images 102

1.33:1 images 103

APPENDIX C: SUPPORTED SIGNAL INPUT MODES 104

2D input modes 104

3D input modes 106

APPENDIX D: MENU MAP 107

APPENDIX E: WIRING DETAILS 113

Signal inputs and outputs 113

VGA 113

HDMI 1 and 2 114

DVI 115

3G-SDI In, 3G-SDI Out 116

Component 1 116

Component 2 116

Control connections 117

LAN 117

RS232 117

Trigger 1 & Trigger 2 118

IR input 118

USB 118

3D Sync IN and 3D Sync OUT 118

CONTENTS (continued)

APPENDIX F: GLOSSARY OF TERMS **119**
TECHNICAL SPECIFICATIONS **130**
Models **130**
Inputs and outputs **131**
Bandwidth **131**
Remote control and keypad **131**
Automation control **131**
Color temperature **131**
Lenses **132**
Lens mount **132**
Mechanical mounting **132**
Orientation **132**
Electrical and physical specifications **133**
Safety & EMC regulations **133**

DIGITAL PROJECTION

HIGHlite Laser 3D Series

High Brightness Digital Video Projector

INSTALLATION AND QUICK-START GUIDE

Rev C February 2015

IN THIS GUIDE

What's In The Box? 3

Connecting The Power Supply 4

Projector Overview 5
- Front and rear views 5
- Control panel 6

Remote Control 7
- Infrared reception 10

Positioning The Screen And Projector 11
- Roll and pitch 12

Changing The Lens 13
- The lens hood 13
- Inserting a new lens 14
- Removing the lens 15

Changing The Filters 16

Operating The Projector 17
- Switching the projector on 17
- Switching the projector off 17
- Selecting an input signal or test pattern 18
  - Input signal 18
  - Test pattern 18
- Adjusting the lens 19
  - Lens menu 19
  - Remote control 19
- Adjusting the image 20
  - Orientation 20
  - Keystone 20
  - Picture 20

What's In The Box?

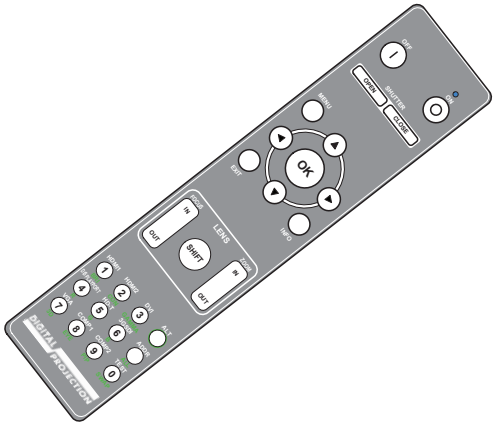

Remote control (116-088)

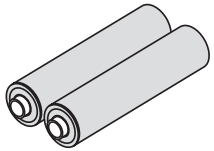

2x AAA batteries

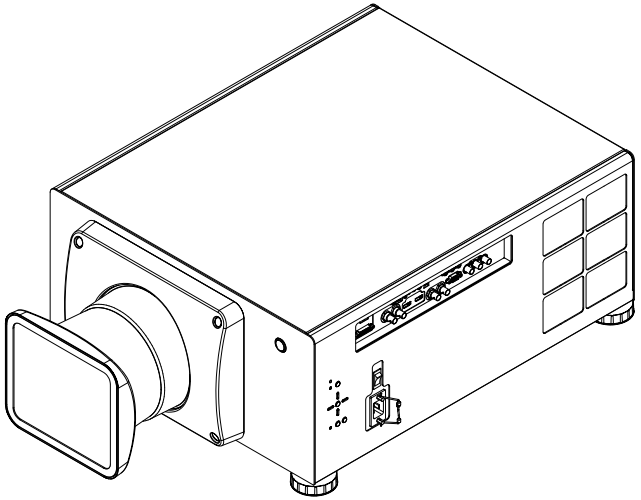

Projector

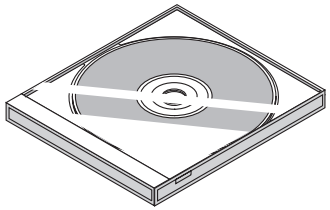

User Manual on disc (115-759)

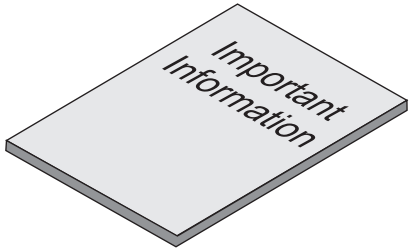

Important Information (114-914)

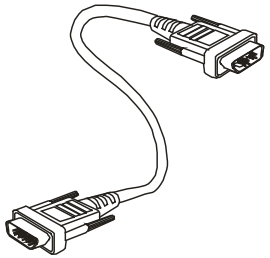

VGA cable

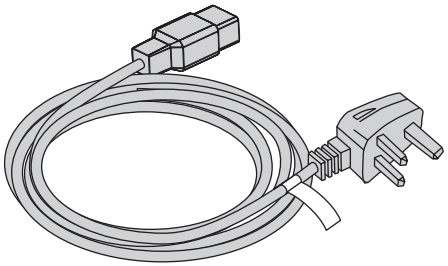

Power cable, United Kingdom (112-000)

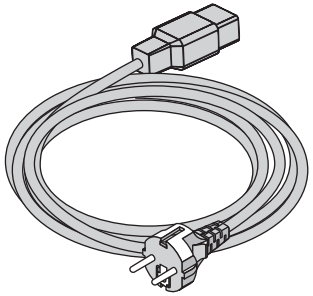

Power cable, Europe (112-001)

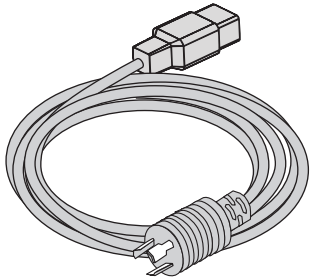

Power cable, North America (112-002)

Notes

Make sure your box contains everything listed. If any pieces are missing, contact your dealer.

Only one remote will be supplied with the projector. For more information, see ***Remote Control*** *further in this guide.*

You should save the original box and packing materials, in case you ever need to ship your projector.

The projector is shipped without a lens.

Do not use the short lens hood with the long throw lens.

For further information about using the right lens and hood, see ***The lens hood*** *further in this guide.*

Only one power cable - dependent on the destination territory - will be supplied with the projector.

Connecting The Power Supply

Lift the cable lock up, push the mains connector in firmly and push the lock down to secure the cable.

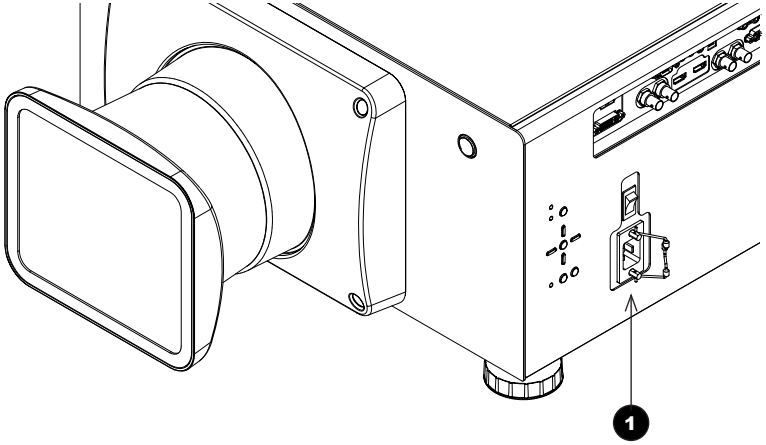

1 **AC mains inlet with cable lock**

Notes

Use only the power cable provided.

Ensure that the power outlet includes a ground connection as this equipment MUST be earthed.

Handle the power cable carefully and avoid sharp bends. Do not use a damaged power cable.

Projector Overview

Front and rear views

1. Control panel
2. Connection panel
3. Air outlet
4. Lens hood
5. Front infrared window
6. Power switch and power connection
7. Air outlet
8. Rear infrared window
9. Air inlet
10. Adjustable feet

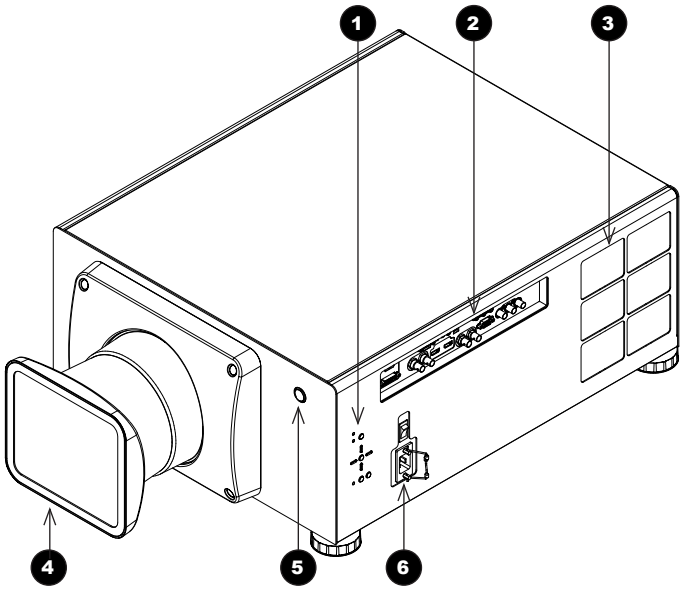

Front view

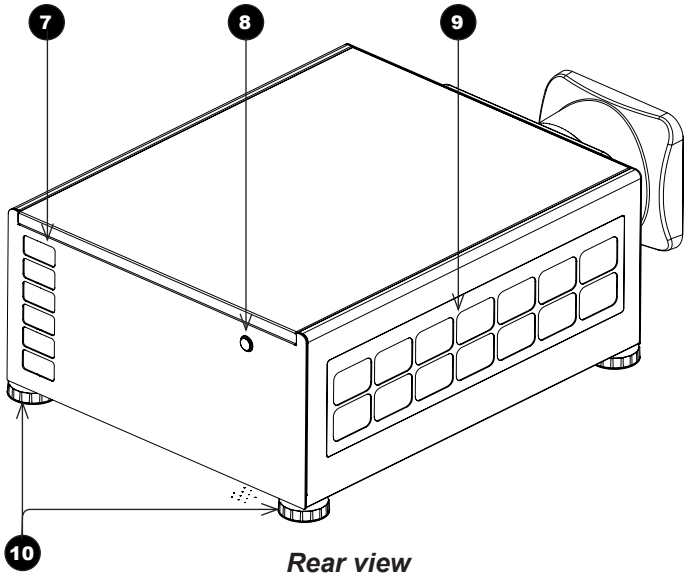

Rear view

Notes

Do not use the short lens hood with the long throw lens.

For further information about using the right lens and hood, see ***The lens hood*** *further in this guide.*

Control panel

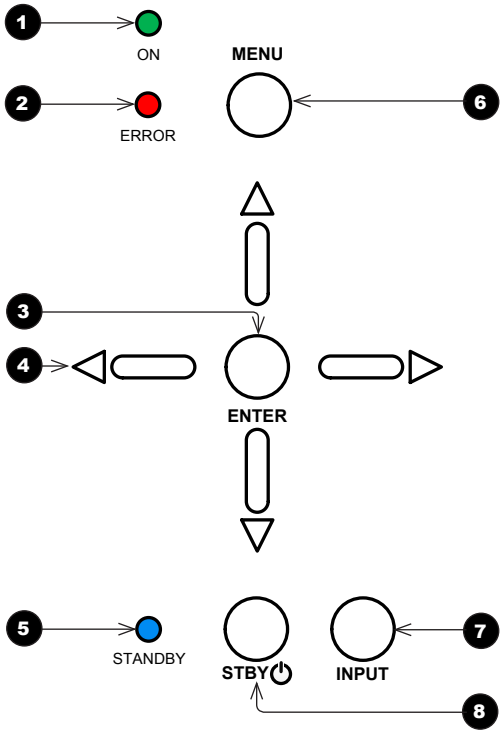

1 **ON indicator (green)**

Behavior	Meaning
Off	The projector is switched off.
Flashing	The projector is warming up or cooling down.
On	The projector is switched on (Normal mode).

2 **ERROR indicator (red)**

Behavior	Meaning
Flash three times, then pause	Fan failure.
Flash four times, then pause	Over temperature.
Flash five times, then pause	Filter failure.
On	System error.

3 **ENTER button**
Confirm your choice when navigating the OSD.
Access the **Lens Control** setting: shift the lens, zoom and focus the image.

4 **Arrow buttons**
Navigate the OSD, edit settings.

5 **STANDBY indicator (blue)**

Behavior	Meaning
On	The projector is in STANDBY mode.

6 **MENU button**
Access the projector OSD (on-screen display).

7 **INPUT button**
Select input source.

8 **STBY button**
Switch the projector on and off (in STANDBY mode)

Notes

During startup all LEDs light up at the same time to indicate the projector is carrying out a self-test.

Remote Control

1. **Power ON / OFF**

2. **Shutter OPEN / CLOSE**

3. **MENU**
   Access the projector OSD (on-screen display). If the OSD is open, press this button to go back to the previous menu.

4. **Navigation**
   Navigate through the menus with the arrows, confirm your choice with **OK**.
   In LENS SHIFT mode the arrows are used to move the lens. See **7** below.

5. **EXIT**
   Close the OSD.

6. **Focus IN / OUT**
   Adjust focus.

7. **SHIFT**
   Press and hold this button, then press the ***Navigation*** arrow buttons to move the lens.

8. **INFO**
   Access information about the projector.

9. **Zoom IN / OUT**
   Adjust zoom.

continues on next page...

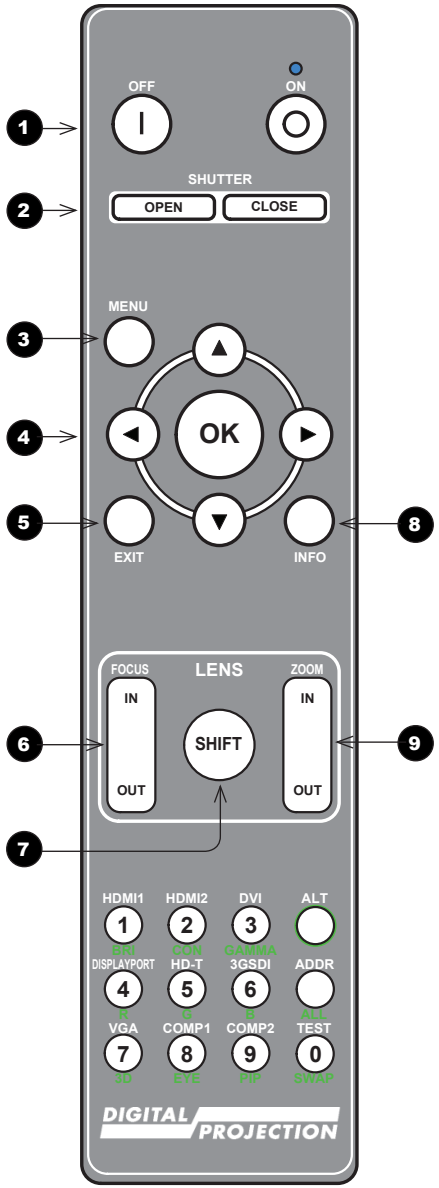

Remote control

Notes

10 **ALT**
Press and hold this button to access alternative functions for all buttons with a green label.

11 **HDMI 1 / BRI / numeric input 1**
Select the HDMI 1 input.
Use with **ALT** to bring up the **Brightness** control, then adjust the value with the **LEFT** and **RIGHT** arrow buttons.

12 **HDMI 2 / CON / numeric input 2**
Select the HDMI 1 input.
Use with **ALT** to bring up the **Contrast** control, then adjust the value with the **LEFT** and **RIGHT** arrow buttons.

13 **DVI / GAMMA / numeric input 3**
Select the DVI input.
Use with **ALT** to switch to the next **Gamma** value:
...1.0, 1.8, 2.0, 2.2, 2.35, 2.5...

14 **DISPLAYPORT / R / numeric input 4**
Use with **ALT** to switch the red DMD on and off. This functionality is disabled when the projector is showing a test pattern.

15 **HD-T / G / numeric input 5**
Select the HDBaseT input.
Use with **ALT** to switch the green DMD on and off. This functionality is disabled when the projector is showing a test pattern.

16 **3GSDI / B / numeric input 6**
Select the 3G-SDI input.
Use with **ALT** to switch the blue DMD on and off. This functionality is disabled when the projector is showing a test pattern.

continues on next page...

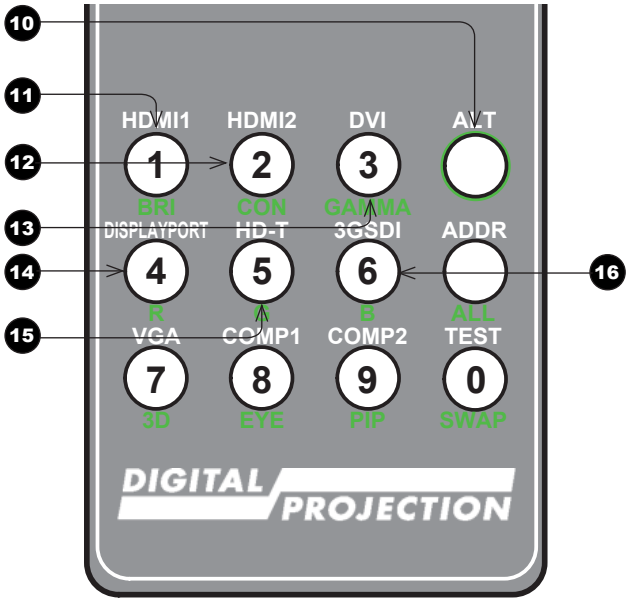

Remote control

Notes

DISPLAYPORT *is not available on this projector.*

17 **VGA / 3D / numeric input 7**
Select the VGA input.
Use with **ALT** to toggle the **3D Format** setting between **Off** and **Auto**.

18 **COMP1 / EYE / numeric input 8**
Select the Component 1 input.
Use with **ALT** to switch between left and right eye 3D dominance.

19 **COMP2 / PIP / numeric input 9**
Select the Component 2 input.

20 **TEST / SWAP / numeric input 0**
Show a test pattern. Press again to show the next test pattern:
...Off, White, Black, Red, Green, Blue, CheckerBoard, CrossHatch, V Burst, H Burst, ColorBar...

21 **ADDR / ALL**
Assign and unassign an IR remote address.
To assign an address:

1. Press and hold this button until the indicator starts flashing.
2. Release this button and while the indicator is still flashing, enter a two-digit address using the numeric input buttons. The indicator will flash three times quickly to confirm the change.

To unassign an address and return to the default address 00,

- Press and hold **ALT** and this button simultaneously until the indicator flashes to confirm the change.

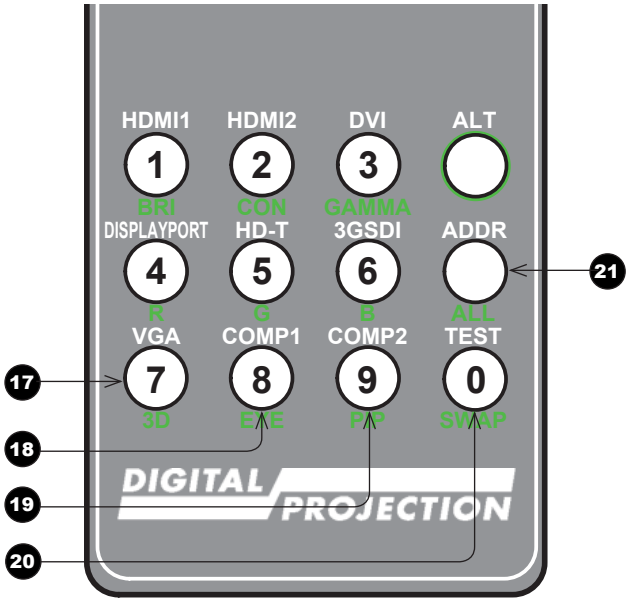

Remote control

Notes

***PIP** and **SWAP** are not available on this projector.*

Infrared reception

The projector has infrared sensors at the front and back.

The angle of acceptance is 40°. Make sure that the remote control is within the angle of acceptance when trying to control the projector.

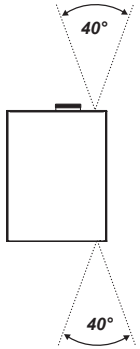

Infrared reception

Notes

Positioning The Screen And Projector

1. Install the screen, ensuring that it is in the best position for viewing by your audience.
2. Mount the projector, ensuring that it is at a suitable distance from the screen for the image to fill the screen. Set the adjustable feet so that the projector is level, and perpendicular to the screen.

The drawing below shows the positions of the feet for table mounting, and the fixing holes for ceiling mounting.

1 **Four adjustable feet**

2 **Six M6 holes for ceiling mount**
The screws should not penetrate more than 15 mm into the body of the projector.

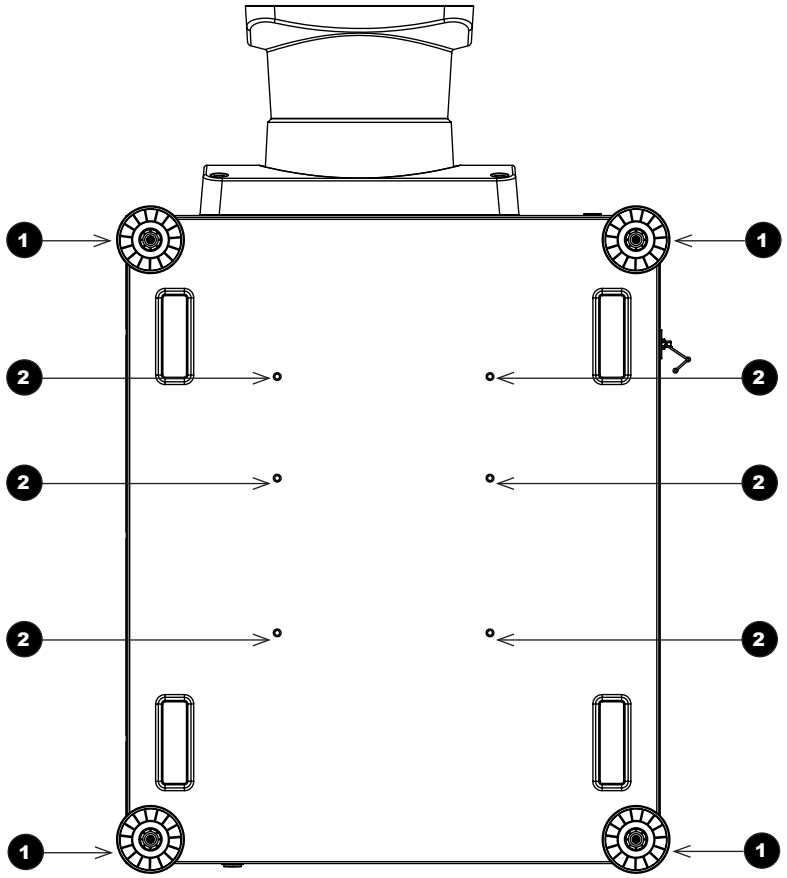

Notes

Always allow the projector to cool for 5 minutes before disconnecting the power or moving the projector.

Ensure that there is at least 30 cm (12 in) of space between the ventilation outlets and any wall, and 10 cm (4 in) on all other sides.

Do not stack more than 3 projectors.

Roll and pitch

The projector can be operated in numerous positions.

The only non-workable angle is in portrait mode with inputs facing upward, as shown in the diagram.

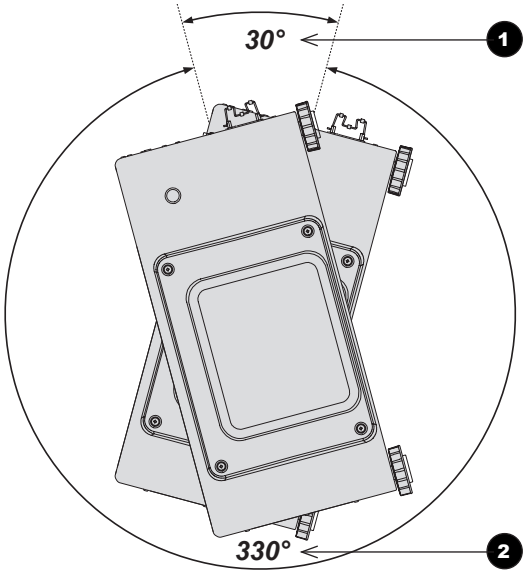

Roll

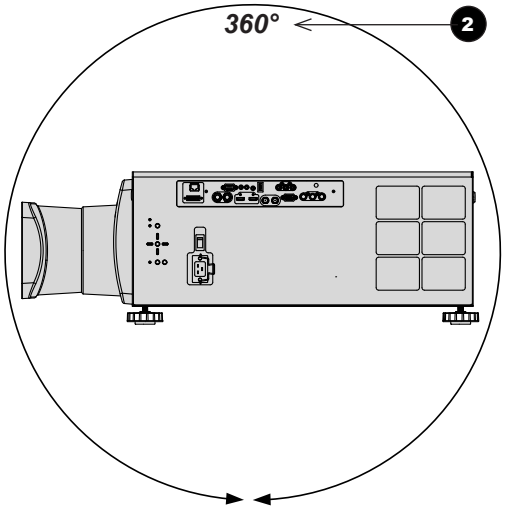

Pitch

1 **Non-workable angle**

2 **Workable angles**

Notes

Changing The Lens

The lens hood

There are two types of lens hood, short and long.

The short lens hood is used with the following lenses:

Throw ratios	Part number
0.77 : 1 fixed lens	110-808
1.16 : 1 fixed lens	110-809
1.45 - 1.74 : 1 zoom lens	110-803
1.74 - 2.17 : 1 zoom lens	112-878
2.17 - 2.90 : 1 zoom lens	113-852
2.90 - 4.34 : 1 zoom lens	110-806

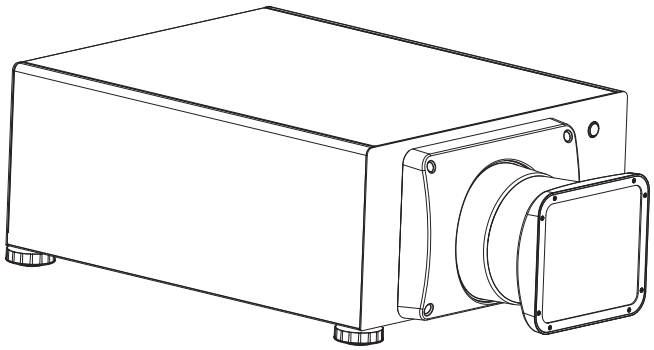

Projector with short lens hood fitted

The long lens hood must be used with the following long throw lens:

Throw ratios	Part number
4.34 - 6.76 : 1 zoom lens	110-807

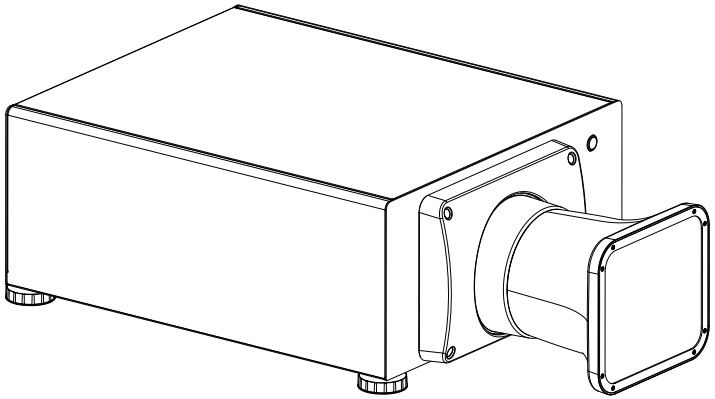

Projector with long lens hood fitted

Notes

Before changing the lens, always make sure the projector is switched off and fully disconnected from its power supply.

When changing the lens, avoid using excessive force as this may damage the equipment.

Take care to preserve the original lens packaging and protective caps for future use.

Do not use the short lens hood with the long throw lens.

The projector will not power on without the lens and lens hood fitted.

Inserting a new lens

1. Insert the lens into the lens aperture, making sure that the plug on the zoom drive mechanism lines up with socket on the right of the lens aperture.

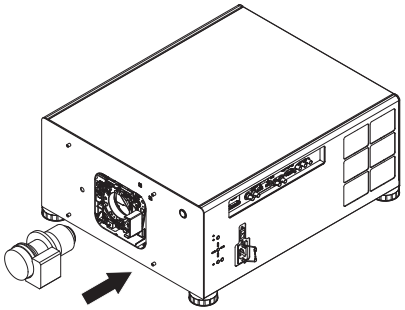

2. Rotate the lens clockwise until it clicks into place.

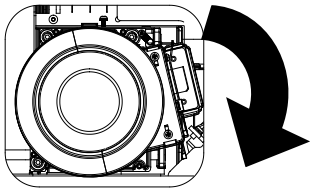

3. Secure the lens hood to the front of the projector with the screws.

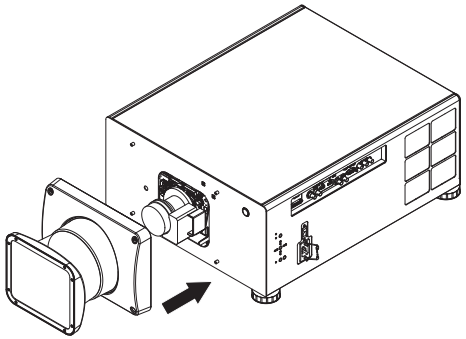

Notes

Before changing the lens, always make sure the projector is switched off and fully disconnected from its power supply.

When changing the lens, avoid using excessive force as this may damage the equipment.

Take care to preserve the original lens packaging and protective caps for future use.

Do not use the short lens hood with the long throw lens.

The projector will not power on without the lens and lens hood fitted.

Removing the lens

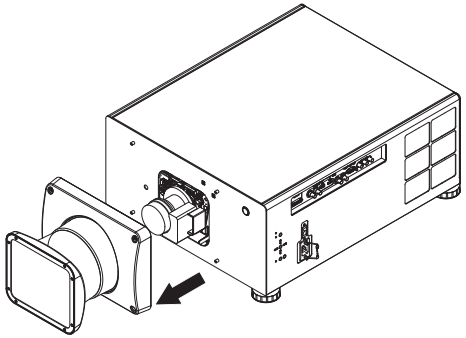

1. Loosen the four screws securing the lens hood to the body of the projector. Remove the lens hood.

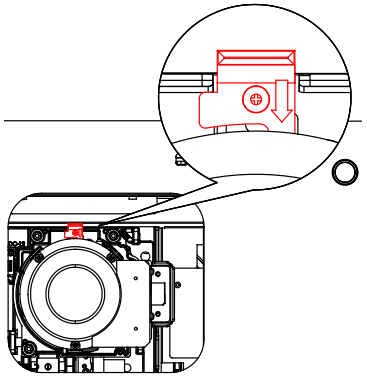

2. Push down the lens holder tab.

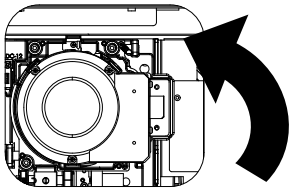

3. Rotate the lens anti-clockwise.

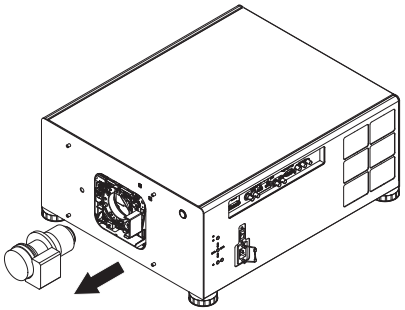

4. Pull the lens forward to remove it from the lens aperture.

Notes

Before changing the lens, always make sure the projector is switched off and fully disconnected from its power supply.

When changing the lens, avoid using excessive force as this may damage the equipment.

Take care to preserve the original lens packaging and protective caps for future use.

The projector will not power on without the lens and lens hood fitted.

Changing The Filters

1. Loosen the screws holding the filter cover.

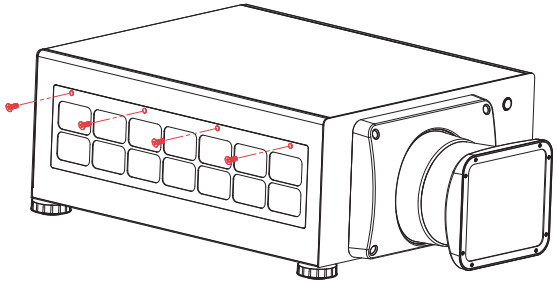

2. Remove the old filter.

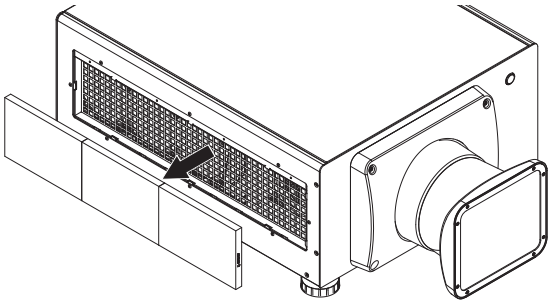

3. Insert the new filter. Make sure the air flow arrow on the side of the filter panel points toward the projector, as shown in the illustration.

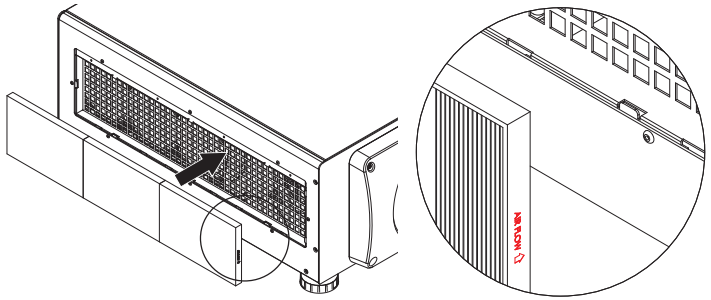

4. Replace the filter cover and tighten the screws

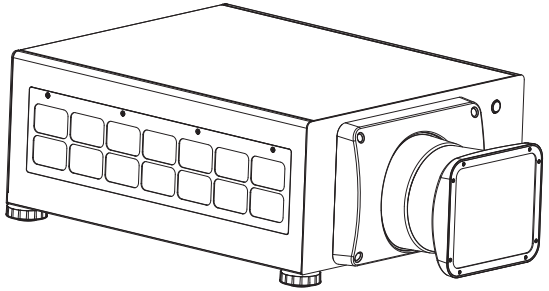

Notes

Before changing the filters, always make sure the projector is switched off and fully disconnected from its power supply.

When changing the filters, avoid using excessive force as this may damage the equipment.

In a normal environment the filters should be changed every 2000 hours.

Operating The Projector

Switching the projector on

1. Connect the power cable between the mains supply and the projector. Switch on at the switch next to the power connector.

   Wait until the self-test has completed and the **STANDBY** indicator on the projector control panel shows blue. The system will be off and the projector will be in STANDBY mode.

2. Press **ON** on the remote control or **STBY** on the control panel to switch the projector ON. The **ON** indicator on the control panel will show green, the system will light and the shutter will open.

Switching the projector off

1. Press **OFF** on the remote control or **STBY** on the control panel, then press again to confirm your choice. The **ON** indicator on the control panel will start flashing, the system will go out and the cooling fans will run for a short time until the projector enters STANDBY mode.

2. If you need to switch the projector off completely, switch off at the mains power switch next to the power connector and then disconnect the power cable from the projector.

Notes

See also ***Connecting The Power Supply*** *earlier in this guide.*

The self-test is running when all the LEDs on the control panel are lit.

Use only the power cable provided.

Ensure that the power outlet includes a ground connection as this equipment MUST be earthed.

Handle the power cable carefully and avoid sharp bends. Do not use a damaged power cable.

Selecting an input signal or test pattern

Input signal

- Connect an image source to the projector. The signal should be automatically detected by the projector, and should be displayed within two or three seconds.
- If more than one signal is connected, then select the input you want to display:
  - Press one of the input buttons on the remote control.
  - Alternatively, open the On-screen display (OSD) by pressing **MENU**. Highlight **Input** from the main menu, press **ENTER/OK** and then select an input signal using the **UP** and **DOWN** arrow buttons. Press **ENTER/OK** to confirm your choice.

Test pattern

To display a test pattern:

- Press **TEST** on the remote control. If necessary, press again to change the test pattern. Test patterns are displayed in the following order:

  ...Off, White, Black, Red, Green, Blue, CheckerBoard, CrossHatch, V Burst, H Burst, ColorBar...
- Alternatively, open the OSD by pressing **MENU**. Highlight **Test Patterns** from the main menu, then select a test pattern using the **LEFT** and **RIGHT** arrow buttons.

Notes

*For full details of how to use the controls and the menu system, see the **Operating Guide**.*

Adjusting the lens

The lens can be adjusted using the **Lens** menu, or using the lens buttons on the remote control.

Lens menu

The **Lens** menu provides access to the **Lens Control** setting and the **Lens Center** command.

Lens Control allows **Zoom**, **Focus** and **Shift** adjustment using the arrow buttons. The setting operates in **Zoom/Focus Adjustment** and **Shift Adjustment** mode.

Press **ENTER/OK** to switch between modes as follows:

- **Zoom/Focus Adjustment** mode with the source image
- **Shift Adjustment** mode with the source image

- **Zoom/Focus Adjustment** mode with an alignment grid
- **Shift Adjustment** mode with an alignment grid

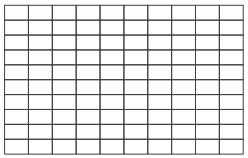

- **Zoom/Focus Adjustment** mode with an aspect test
- **Shift Adjustment** mode with an aspect test

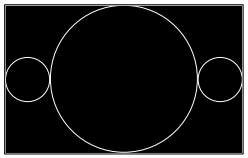

- **Zoom/Focus Adjustment** mode with a screen layout pattern
- **Shift Adjustment** mode with a screen layout pattern

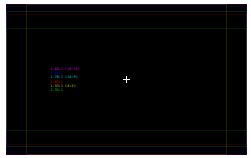

...

Remote control

Use the lens buttons on the remote control to adjust zoom, focus and shift directly, without opening a menu.

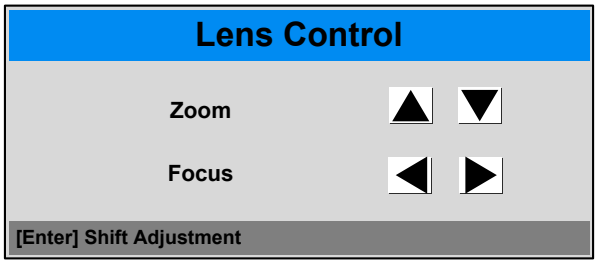

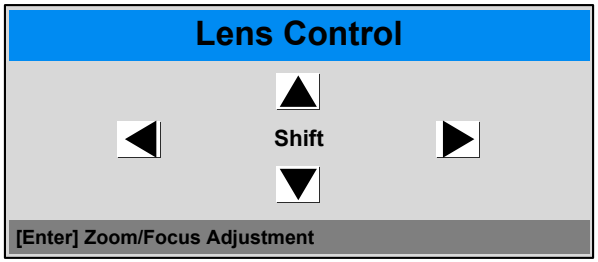

Notes

For full details of how to adjust the lens using the remote control, see ***Remote Control*** *earlier in this guide.*

Adjusting the image

Orientation

- This can be set from the **Setup** menu.

  Highlight **Orientation** and choose from **Desktop Front**, **Ceiling Front**, **Desktop Rear** and **Ceiling Rear**.

Keystone

- This can be set from the **Geometry** menu.

Picture

- Settings such as **Brightness**, **Contrast** and **Gamma** can be set from the **Image** menu.
- You can also set **Brightness**, **Contrast** or **Gamma** via the remote control by pressing and holding **ALT** while pressing **BRI**, **CON** or **GAMMA** respectively.

Notes

Setup menu
Orientation

Geometry menu
Keystone

Image menu

DIGITAL PROJECTION

HIGHlite Laser 3D Series

High Brightness Digital Video Projector

CONNECTION GUIDE

Rev C February 2015

IN THIS GUIDE

Signal Inputs 23
- **Digital inputs and outputs** 23
- **Analog inputs** 24
- **EDID on the DVI and VGA inputs** 25
- **Using HDMI/DVI switchers with the projector** 25
- **3D connections** 26
  - 3D sources up to 60Hz requiring frame doubling and left/right interleaving 26
  - Frame sequential 3D sources up to 120Hz 26
  - Dual Pipe 3D 26
- **3D Sync** 27
  - 3D Sync in 27
  - 3D Sync out 27

Control Connections 28
- **LAN connection examples** 29
- **RS232 connection example** 30

Signal Inputs

Digital inputs and outputs

1. **HDBaseT**

   Receives digital signal from HDBaseT-compliant devices.

2. **HDMI 1, HDMI 2, Dual Pipe 3D**

   Two identical single HDMI 1.4 inputs which support HDCP 1.1 and DVI 1.0.
   Used together, the two sockets become a dual HDMI input which supports Dual Pipe 3D.
   Dual Pipe 3D supports sources up to 1920x1200 resolution at frame rates consistent with up to 148.5 Mpx/sec/pipe (including blanking).

3. **DVI**

   This input has a DVI-I connector, which can receive digital (DVI-D) signal from a compatible source.

   Supports sources up to 1920x1200 resolution, 24-120 Hz. Supports HDCP.

4. **3G-SDI in**
5. **3G-SDI out**

   Connect a 3G-SDI cable to distribute the 3G-SDI signal to another projector.

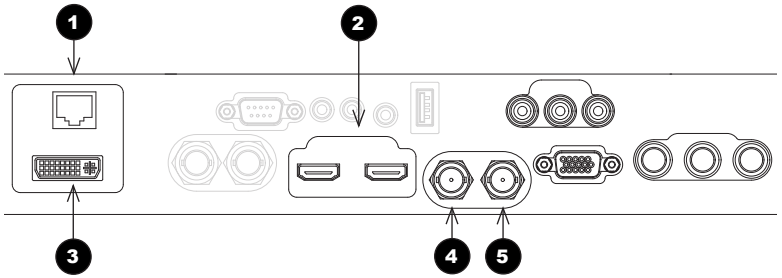

Digital connections

1. **HDBaseT**
2. **HDMI 1 & HDMI 2**
3. **DVI**
4. **3G-SDI in**
5. **3G-SDI out**

Notes

For a complete listing of all supported signal input modes, see ***Appendix C: Supported Signal Input Modes*** *in the* ***Reference Guide****.*

For a complete listing of pin configurations for all signal and control connectors, see ***Appendix E: Wiring Details*** *in the* ***Reference Guide****.*

The DVI input is designed to handle high bandwidth signals (above 60 Hz) in addition to lower frequencies.

Analog inputs

1. **Component 1**
2. **Component 2**

   The ***Component*** inputs use colorspaces assigned from the **Color Space** setting in the **Color** menu. Set **Color Space** to **Auto** and the projector will automatically detect and assign the colorspace as required. Otherwise, assign the colorspace as follows:
   - When using ***RGsB***, set **Color Space** to **RGB PC** or **RGB Video**.
   - When using ***YPbPr***, set **Color Space** to **YPbPr**.
   - When using ***YCbCr***, set **Color Space** to **YCbCr**.
3. **VGA**

   This input receives analog signals from a computer. When using this input, it is best to use a fully wired VGA cable to connect the source to the projector. This will allow the source to determine the projector's capabilities via DDC and show an optimized image. Such cables can be identified as they have a blue connector shell.

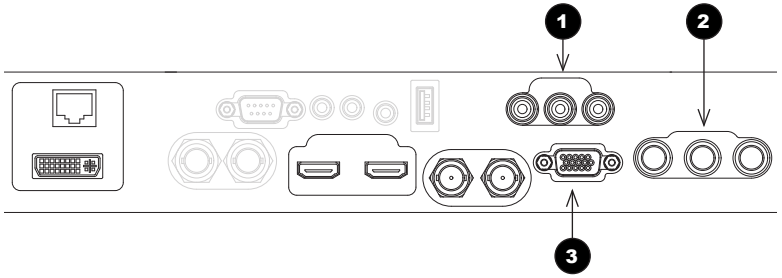

Analog connections

1. **Component 1**
2. **Component 2**
3. **VGA**

Notes

For a complete listing of all supported signal input modes, see ***Appendix C: Supported Signal Input Modes*** *in the* ***Reference Guide****.*

For a complete listing of pin configurations for all signal and control connectors, see ***Appendix E: Wiring Details*** *in the* ***Reference Guide****.*

EDID on the DVI and VGA inputs

If you are using a computer DVI card or another source that obeys the EDID protocol, the source will automatically configure itself to suit the projector.

Otherwise refer to the documentation supplied with the source to manually set the resolution to the DMD™ resolution of the projector or the nearest suitable setting. Switch off the source, connect to the projector, then switch the source back on again.

Using HDMI/DVI switchers with the projector

When using an HDMI/DVI source switcher with the projector, it is important to set the switcher so that it passes the projector EDID through to the source devices. If this is not done, the projector may not be able to lock to the source or display the source correctly as its video output timings may not be compatible with those of the projector. Sometimes this is called transparent, pass-through or clone mode. See your switcher's manual for information on how to set this mode.

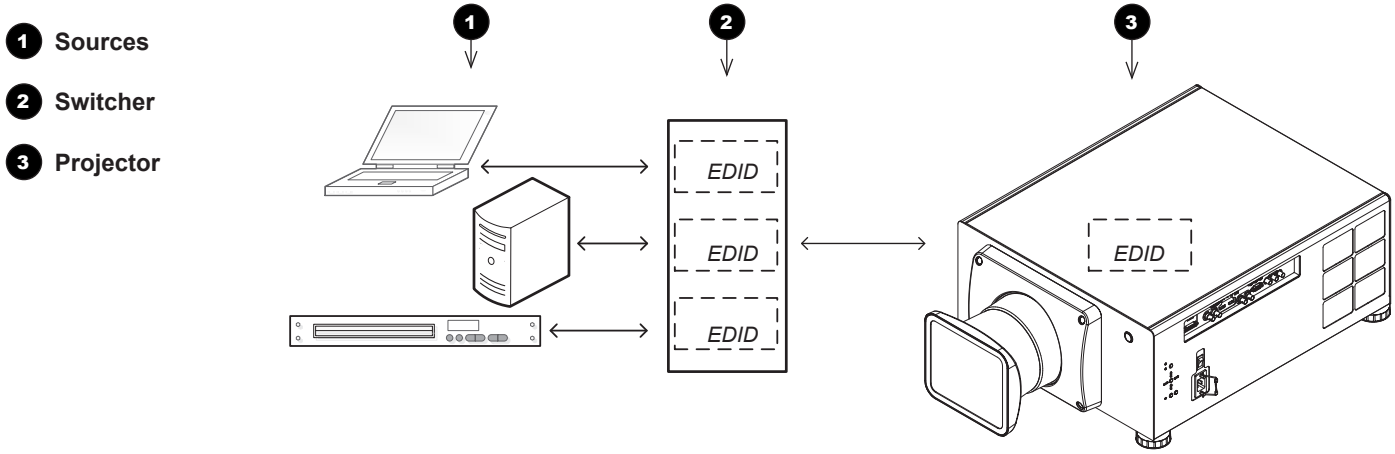

The EDIDs in the switcher should be the same as the one in the projector.

Notes

3D connections

3D sources up to 60Hz requiring frame doubling and left/right interleaving

1. Connect to either of the following inputs on the connection panel:
   - HDMI 1
   - HDMI 2
   - HDBaseT
2. Set **3D Format** in the **3D** menu to match the format of the incoming signal. Choose from **Auto**, **Side by Side (Half)** and **Top and Bottom**.

   The **Frame Packing** format is automatically detected by the projector.

Frame sequential 3D sources up to 120Hz

- Connect to the DVI input.

  The ***Frame Sequential*** format is automatically detected by the projector and is supported on the DVI input only.

Dual Pipe 3D

1. Connect the left eye output to the **HDMI 1** socket and the right eye output to the **HDMI 2** socket.
2. Set **3D Format** in the **3D** menu to **Dual-Pipe**.

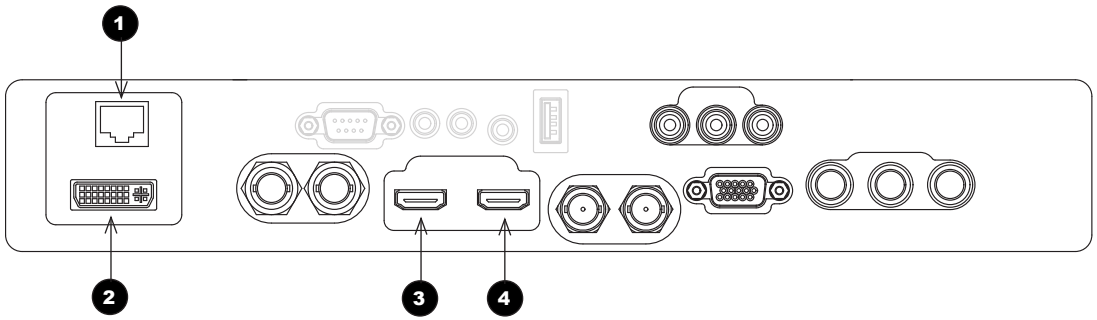

1. **HDBaseT**
2. **DVI**
3. **HDMI 1 / Dual Pipe LEFT**
4. **HDMI 2 / Dual Pipe RIGHT**

Notes

For a complete listing of all supported signal input modes, see ***Appendix C: Supported Signal Input Modes*** *in the* ***Reference Guide****.*

For a complete listing of pin configurations for all signal and control connectors, see ***Appendix E: Wiring Details*** *in the* ***Reference Guide****.*

3D Sync

3D Sync in

Sync input signal.

- Connect the 3D sync from your graphics card or server.

3D Sync out

Sync output signal. This may be affected by the **Sync Offset** setting in the **3D Control** menu.

Connect this to your IR emitter or ZScreen.

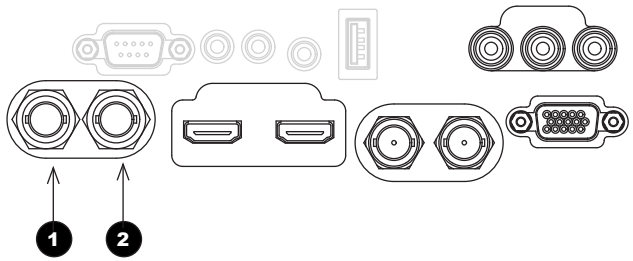

1 **Sync In**

2 **Sync Out**

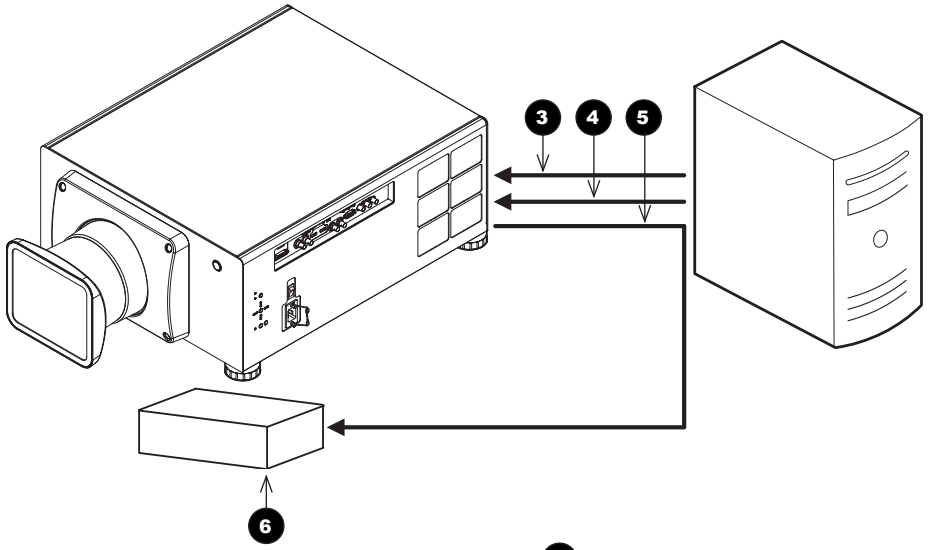

3 **3D input**

4 **3D Sync In**

5 **3D Sync Out**

6 **IR emitter** or **ZScreen**

Notes

For a complete listing of pin configurations for all signal and control connectors, see ***Appendix E: Wiring Details*** *in the* ***Reference Guide****.*

Control Connections

1 **LAN**

- All of the projector's features can be controlled via a LAN connection, using commands described in the ***Protocol Guide***.
- Use a crossed LAN cable to connect directly to a computer, or an uncrossed cable to connect to a network hub.

2 **RS232**

- All of the projector's features can be controlled via a serial connection, using commands described in the ***Protocol Guide***.
- Use a straight-through cable to connect directly to a computer.

3 **Trigger 1 & Trigger 2**

The Trigger outputs are activated by one of the three following conditions, as set in the **Setup** menu:

- Screen trigger: can be connected to an electrically operated screen, automatically deploying the screen when the projector starts up, and retracting the screen when the projector shuts down.
- Aspect ratio trigger: can be used to control screen shuttering for different aspect ratios.
- RS232 trigger: can be used to control the screen or screen shuttering on receipt of an RS232 command

4 **Wired Remote**

The remote control can be connected using a standard TRS cable.

5 **USB**

The USB port is used for firmware updates only.

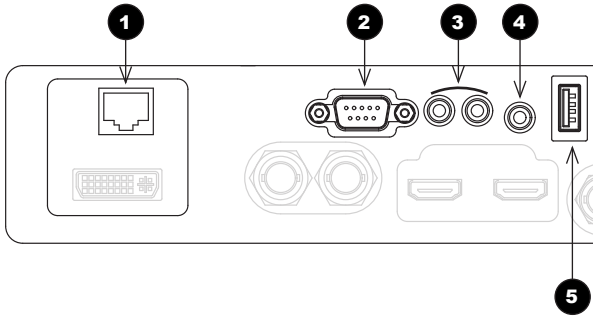

Control connections

Notes

*For a list of all commands used to control the projector via LAN, see the **Protocol Guide**.*

*For a complete listing of pin configurations for all signal and control connectors, see **Appendix E: Wiring Details** in the **Reference Guide**.*

Only one remote connection (RS232 or LAN) should be used at any one time.

LAN connection examples

The projector's features can be controlled via a LAN connection, using Digital Projection's ***Projector Controller*** application or a terminal-emulation program.

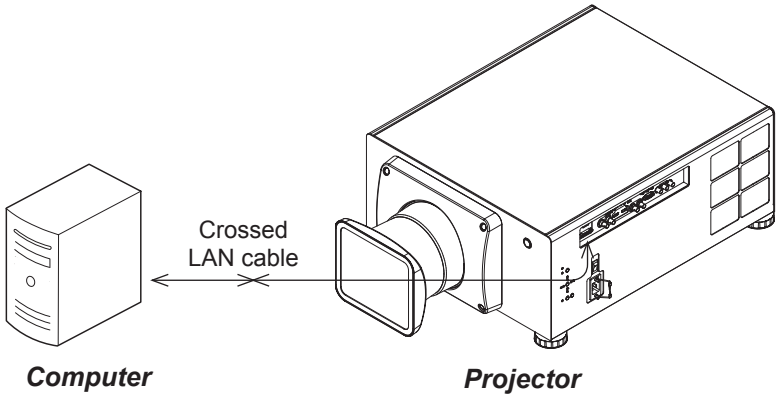

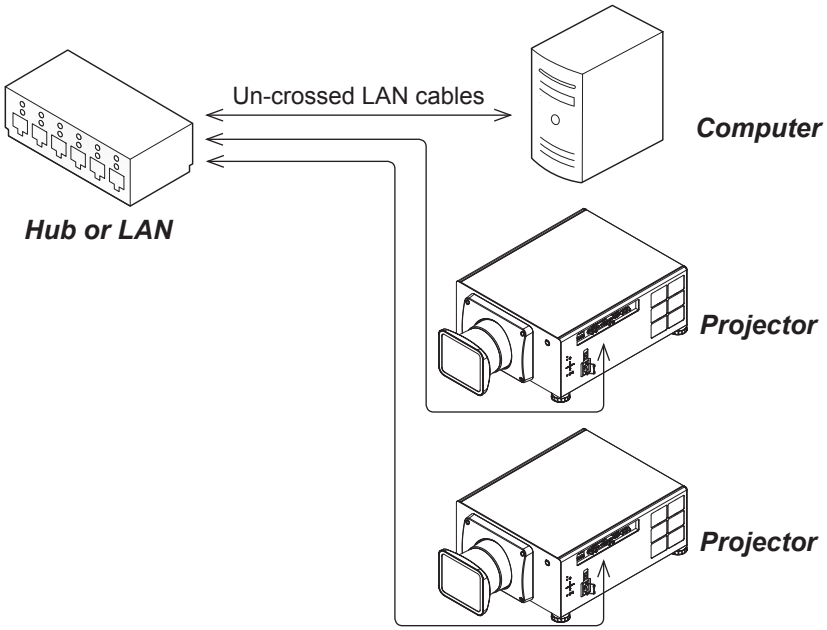

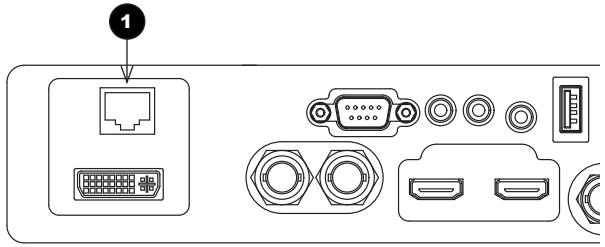

1 LAN

Notes

Projector Controller *is available for download, free of charge, from the Digital Projection website.*

RS232 connection example

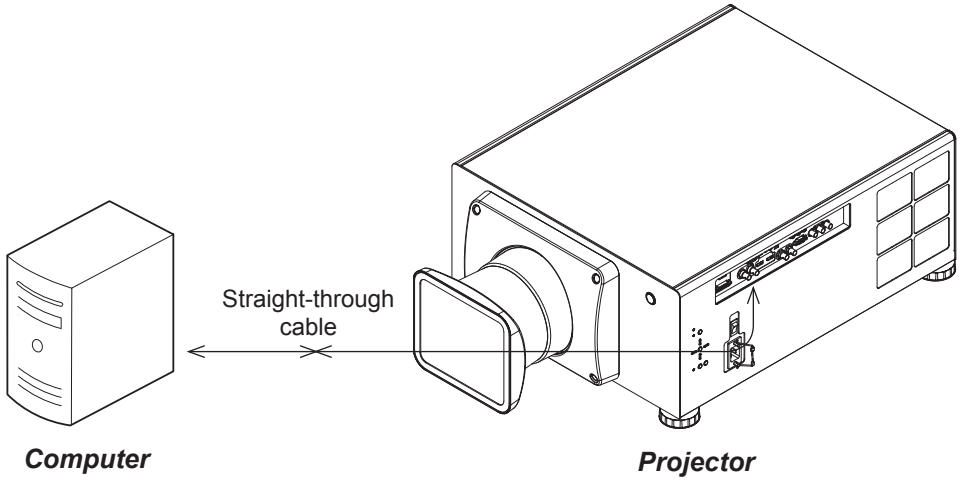

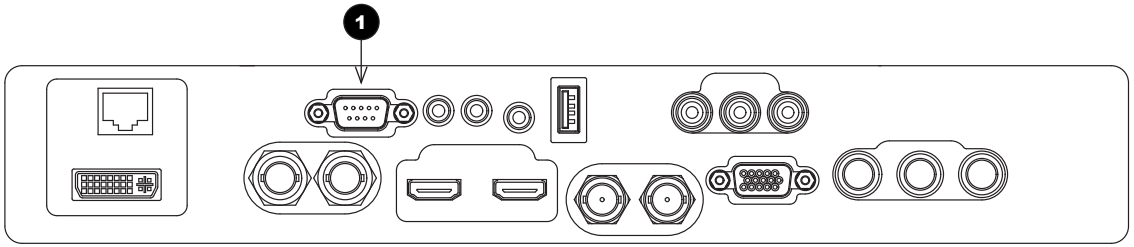

1 RS232

Notes

DIGITAL PROJECTION

HIGHlite Laser 3D Series

High Brightness Digital Video Projector

OPERATING GUIDE

Rev C February 2015

IN THIS GUIDE

Using The Menus 33
- **Opening the OSD** 33
- **Opening a menu** 33
- **Exiting menus and closing the OSD** 33
- **Inside a menu** 34
  - Accessing sub-menus 34
  - Executing commands 34
- **Editing projector settings** 35
  - Choosing a value from a list 35
  - Changing the value without viewing the list 35
  - Using a slider to set a value 35

Using The Projector 36
- **Main menu** 36
- **Lens menu** 37
  - Lens Control 37
  - Lens Center 37
- **Image menu** 38
  - Brightness and Contrast 38
  - Gamma 39
  - Adaptive Contrast 39
  - Saturation, Hue, Sharpness and Noise Reduction 39
  - Position and Phase 40
  - Resync 40
- **Color menu** 41
  - Color Space 41
  - Color Temperature 42
  - Gamut 43
  - User Gamut 44
  - RGB Lift and Gain 46
- **Geometry menu** 47
  - Aspect Ratio 47
  - Overscan 48
  - Keystone 49
  - Rotation 51
  - Pincushion / Barrel 52
  - Corners 53
  - Reset 54
  - Blanking 55
- **Edge Blend menu** 56
  - Blend Width 57
  - Black Level Uplift 58
- **Possible Geometry and Edge Blend combinations** 59
- **3D menu** 60
  - 3D types 61
  - Some 3D settings explained 62
  - Frame rate multiplication in 3D images 63
- **Laser menu** 64
- **Setup menu** 65
  - Infrared Remote 66
  - Network 67
  - On Screen Display 68
  - Presets 69
- **Information menu** 70
  - Factory Reset 70

Using The Menus

Opening the OSD

Access the various menus using either the projector control panel or the remote control. On either device,

- press the **MENU** button.

The on-screen display (OSD) opens showing the list of available menus.

Opening a menu

Move up and down the list using the **UP▲** and **DOWN ▼** arrow buttons. To open a menu,

- press **ENTER** on the control panel or **OK** on the remote control.

This guide refers to the above two buttons as **ENTER/OK**.

Exiting menus and closing the OSD

To go back to the previous page,

- press **MENU**.

When you reach the top level, pressing **MENU** will close the OSD.

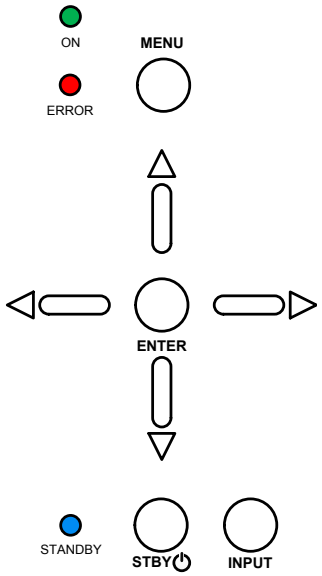

Projector control panel

Remote control

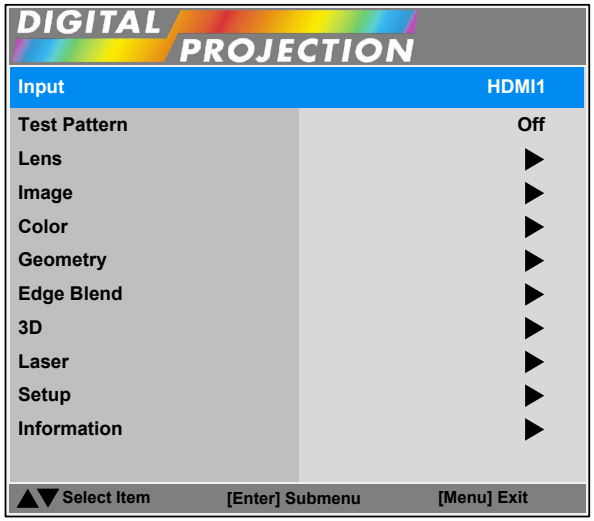

On-screen display (OSD): top level (list of available menus)

Notes

Inside a menu

When you open a menu, the page consists of the following elements:

- Title bar at the top
  Shows which menu (and sub-menu) you have accessed.
- Highlighted item
- Available and unavailable items
  Unavailable items appear a pale green color. Whether an item is available may depend on other settings.
- Text next to each item
  Shows whether the item:
  - has a value that can be changed (shows the current value)
  - opens a sub-menu (**< Enter >**)
  - executes a command (**< Execute >**)

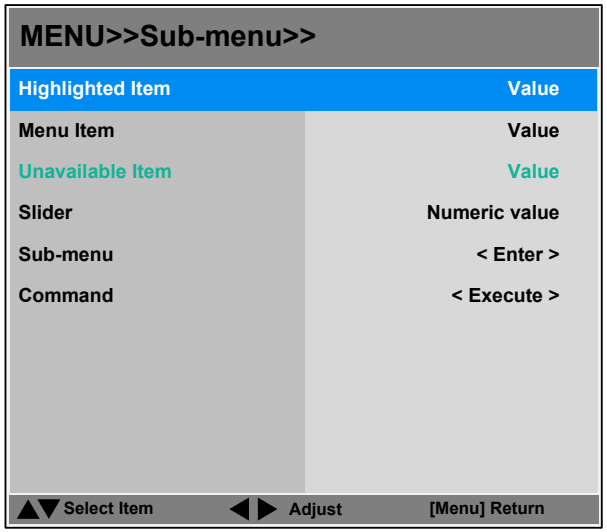

Inside a menu

Accessing sub-menus

Use the **UP** ▲ and **DOWN** ▼ arrow buttons to highlight the sub-menu, then press **ENTER/OK**.

Executing commands

If the item contains a command, press **ENTER/OK** to execute it.

You may be asked for confirmation. Use the **LEFT** ◀ and **RIGHT** ▶ arrow buttons to select your answer and then press **ENTER/OK**.

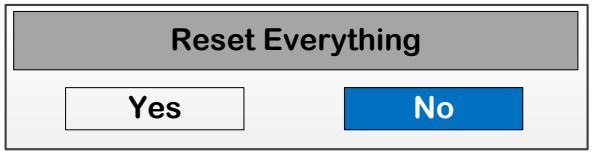

Confirmation dialog

Notes

The highlighted item has white text on a blue background.

Editing projector settings

If the highlighted menu item is a setting with a list of values to choose from, you can change the value in two different ways.

Choosing a value from a list

To access the list of values and then make a selection:

1. Highlight the menu item and press **ENTER/OK**.
2. On the new page that opens, use the **UP** ▲ and **DOWN** ▼ arrow buttons to highlight a value, then press **ENTER/OK** again.
   A green "check" symbol ✓ marks the current selection.
3. Press **MENU** to exit the list.

Changing the value without viewing the list

Some menu items allow you to switch to the next or previous value without viewing the list:

- press the **LEFT** ◀ or **RIGHT** ▶ arrow button.

Using a slider to set a value

Some parameters with a numeric value open a slider. To set such a parameter:

1. Press the **LEFT** ◀ or **RIGHT** ▶ arrow button, or **ENTER/OK**. The arrow buttons will open the slider and adjust the value at the same time. **ENTER/OK** will open the slider without altering the initial value.
2. Use the **LEFT** ◀ and **RIGHT** ▶ arrow buttons to move the slider.
3. When ready, press **MENU** to exit the slider.

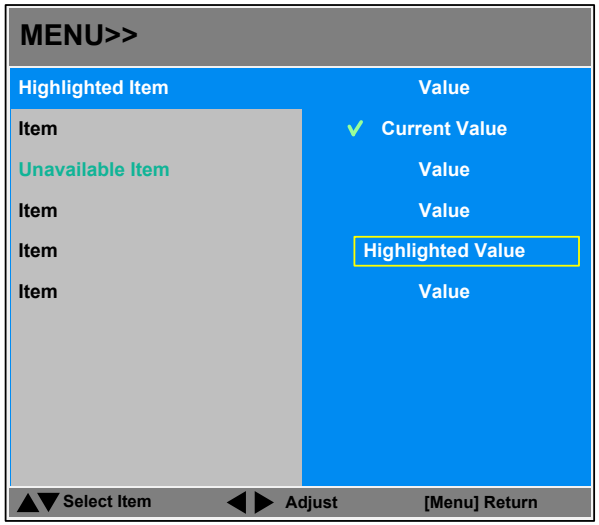

List of values

Slider

Notes

Some menu items may be unavailable due to settings in other menus. Unavailable menu items appear pale green.

Using The Projector

Main menu

- **Input**
  Press **ENTER/OK** to open the list of available inputs.

  Use the **UP** ▲ and **DOWN** ▼ arrow buttons to select an input from the list, then press **ENTER/OK** to confirm your choice.

  Press **MENU** to return to the main menu.

- **Test Pattern**
  Choose from:

  ...Off, White, Black, Red, Green, Blue, CheckerBoard, CrossHatch, V Burst, H Burst, ColorBar...

  Use the **LEFT** ◀ and **RIGHT** ▶ arrow buttons to switch between values.

- **Lens, Image**, **Color**, **Geometry**, **Edge Blend**, **3D**, **Laser**, **Setup** and **Information**
  Press **ENTER/OK** to open these sub-menus and access various settings.

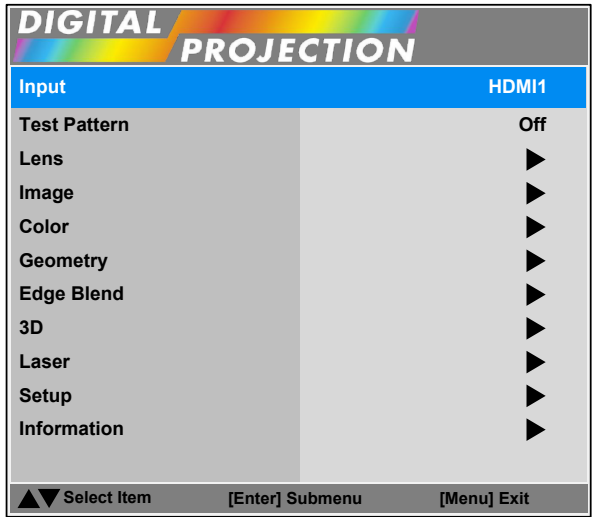

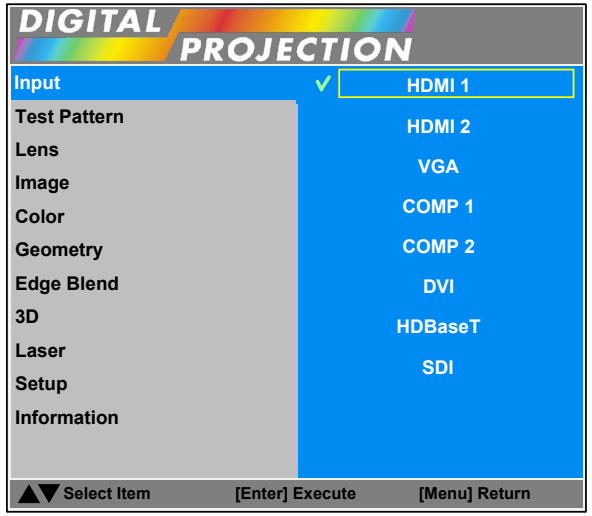

Notes

*See **Signal Inputs** in the **Connection Guide** for further information about the available inputs and connections.*

*Selecting a test pattern hides the OSD. Pressing **MENU** then hides the test pattern and shows the OSD.*

Lens menu

Lens Control

Lens Control settings operate in **Zoom/Focus Adjustment** and **Shift Adjustment** mode.

When in **Zoom/Focus Adjustment** mode:

- Use the **UP** and **DOWN** arrow buttons to adjust **Zoom**.
- Use the **LEFT** and **RIGHT** arrow buttons to adjust **Focus**.

When in **Shift Adjustment** mode, use the arrow buttons to adjust **Shift**.

Press **ENTER/OK** to switch between modes as follows:

- **Zoom/Focus Adjustment** mode with the source image
- **Shift Adjustment** mode with the source image

- **Zoom/Focus Adjustment** mode with an alignment grid
- **Shift Adjustment** mode with an alignment grid

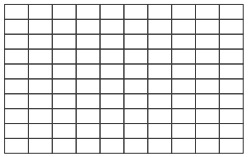

- **Zoom/Focus Adjustment** mode with an aspect test
- **Shift Adjustment** mode with an aspect test

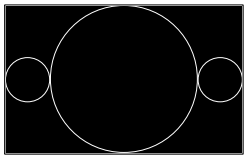

- **Zoom/Focus Adjustment** mode with a screen layout pattern
- **Shift Adjustment** mode with a screen layout pattern

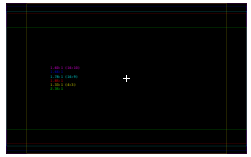

...

Lens Center

Highlight **Lens Center** and press **ENTER/OK**.

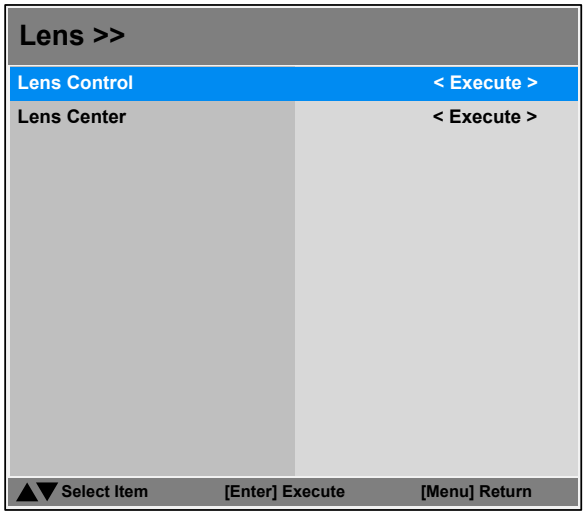

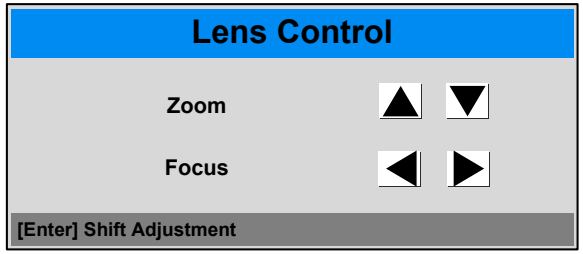

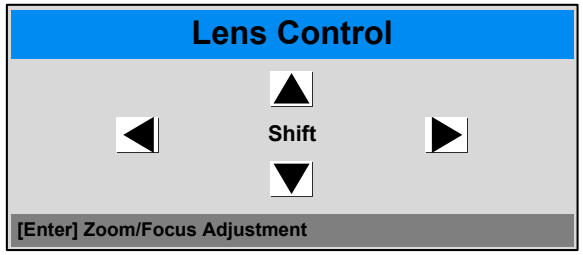

Notes

Image menu

Brightness and Contrast

Highlight the setting you wish to edit, and then press **ENTER/OK**, or the **LEFT** ◀ or **RIGHT** ▶ arrow button to open the slider.

Use the **LEFT** ◀ and **RIGHT** ▶ arrow buttons to adjust the slider.

Press **MENU** to close the slider.

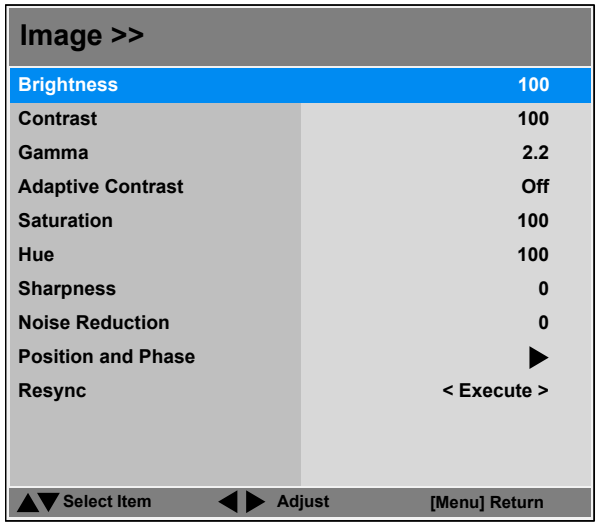

Notes

Image menu continued from previous page

Gamma

Choose a de-gamma curve from **1.0**, **1.8**, **2.0**, **2.2**, **2.35** and **2.5**.

Used correctly, the **Gamma** setting can improve contrast while maintaining good details for blacks and whites.

If excess ambient light washes out the image and it is difficult to see details in dark areas, lower the **Gamma** setting to compensate. This improves contrast while maintaining good details for blacks. Conversely, if the image is washed out and unnatural, with excessive detail in black areas, increase the setting.

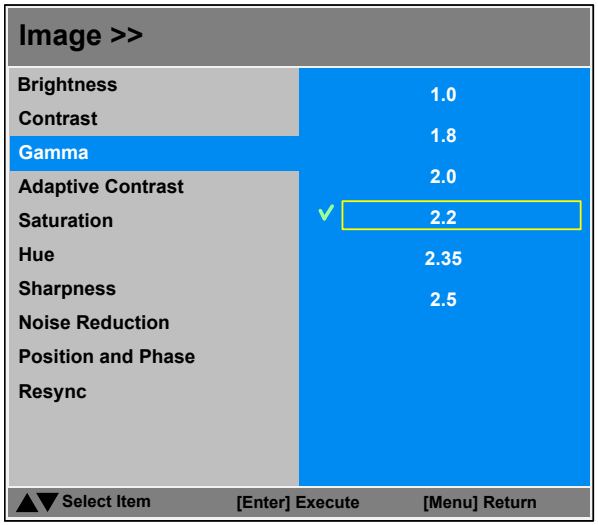

Adaptive Contrast

Set to **On** to expand the light and dark portions of the contrast curve of the image, depending on the mean luminance of the image.

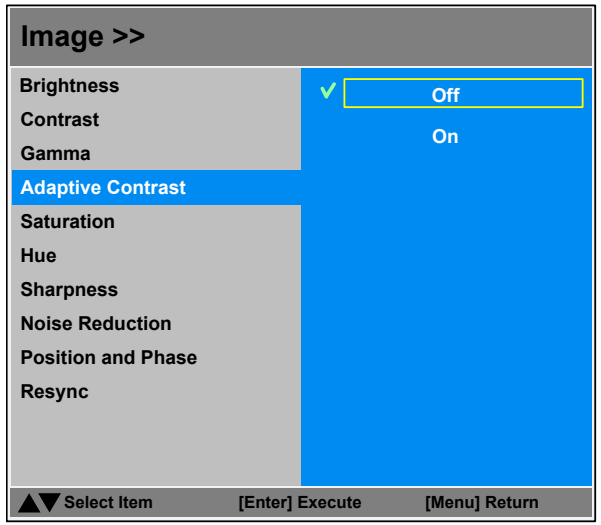

Saturation, Hue, Sharpness and Noise Reduction

Highlight the setting you wish to edit, and then press **ENTER/OK**, or the **LEFT** ◀ or **RIGHT** ▶ arrow button to open the slider.

Use the **LEFT** ◀ and **RIGHT** ▶ arrow buttons to adjust the slider.

Press **MENU** to close the slider.

Notes

Image menu continued from previous page

Position and Phase

Press **ENTER/OK** to open the submenu.

- **V Position** and **H Position**
  Set the sliders as required.
- **Phase**
  Adjusts the phase of the pixel sampling clock relative to the incoming signal. Adjust the phase if noise is visible.
- **Tracking**
  Adjusts the frequency of the pixel sampling clock. Flicker or vertical banding indicate poor tracking.
- **Sync Level**
  Adjusts the voltage level of the signal detection circuitry. Adjust if the projector loses sync during scenes where the signal drops below black.

Highlight the setting you wish to edit, and then press **ENTER/OK**, or the **LEFT** ◀ or **RIGHT** ▶ arrow button to open the slider.

Use the **LEFT** ◀ and **RIGHT** ▶ arrow buttons to adjust the slider.

Press **MENU** to close the slider.

Resync

Press **ENTER/OK** to force the projector to resynchronize with the current input.

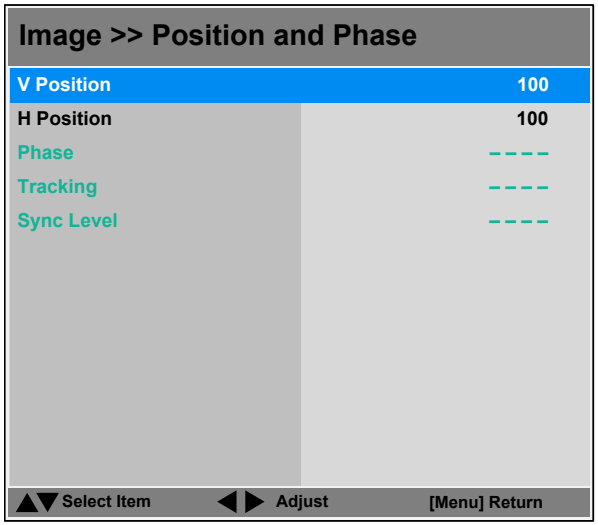

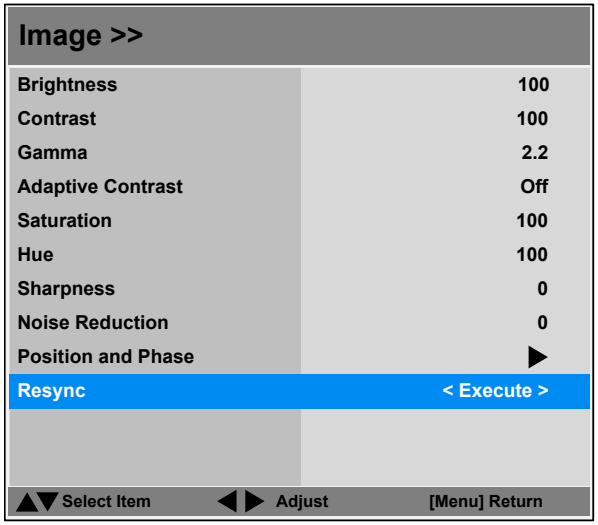

Notes

Some of the settings within the **Position and Phase** *sub-menu,* **Phase**, **Tracking** *and* **Sync Level**, *affect only VGA input source. These settings are not available if the projector is using a different source.*

Adjust the **Phase** *after adjusting* **Tracking**.

Color menu

Color Space

In most cases, the **Auto** setting determines the correct colorspace to use. If it does not, you can choose a specific colorspace:

Choose from **Auto**, **YPbPr**, **YCbCr**, **RGB PC** and **RGB Video**.

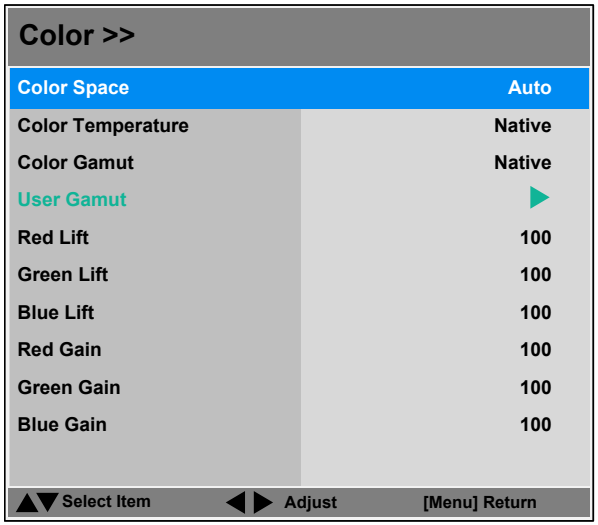

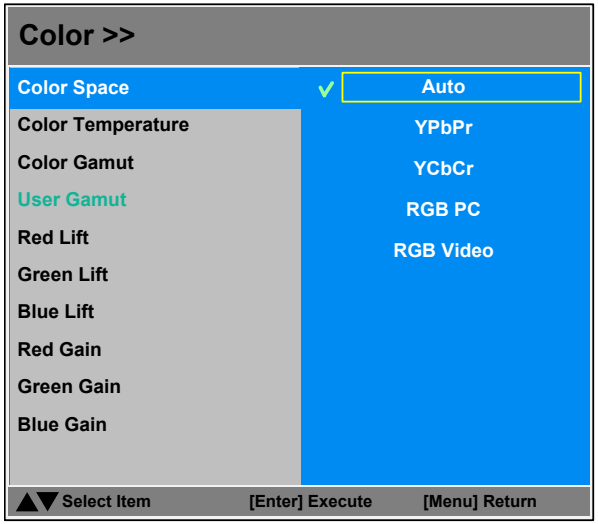

Notes

Color menu continued from previous page

Color Temperature

Choose a value from **3200K** (warmer) to **9300K** (cooler) or **Native** (no correction).

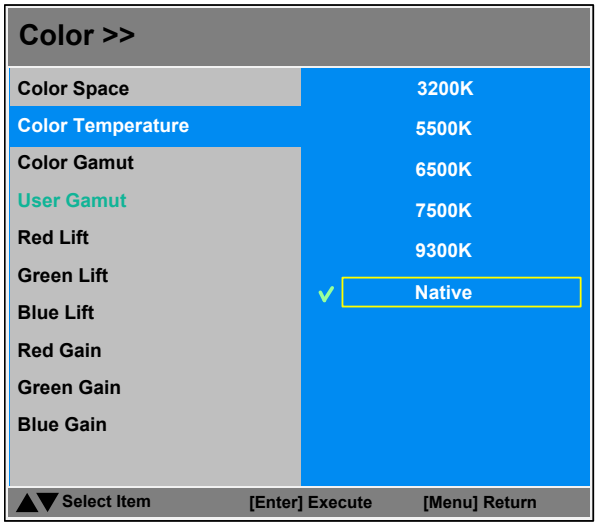

Notes

Color menu continued from previous page

Gamut

In most cases, the **Auto** setting will determine the correct color gamut to use. If it does not, you can select the appropriate setting manually.

Each setting defines the precise hue of each primary (red, green and blue) and secondary (yellow, cyan and magenta) color component used to generate the image.

Use the **LEFT** ◀ and **RIGHT** ▶ arrow buttons to select from:

- **Auto**
- **REC709** for most other sources
- **SMPTE-C** for NTSC, 480i and 480p sources
- **EBU** for PAL, SECAM, 576i and 576p sources
- **Native** — no correction
- **User** — you can upload your own gamut using the ***Projector Controller*** software, and then select the **User** setting. When **User** is selected, **Color Temperature** becomes disabled and **User Gamut** is enabled.

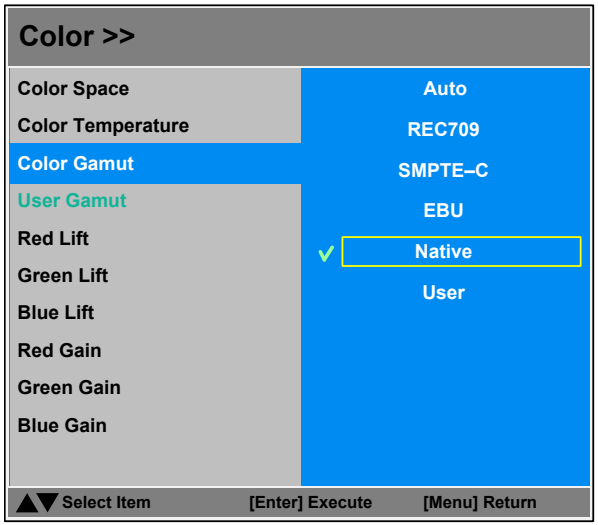

Notes

*The **Projector Controller** software is available for download from the Digital Projection website, free of charge.*

Color menu continued from previous page

User Gamut

To enable this menu, set **Color Gamut** to **User**.

You can enter your own gamut values here, or edit values you have imported using the ***Projector Controller*** software.

Highlight the submenu you wish to open and press **ENTER/OK** to confirm your choice.

To remove all previously entered user gamut values, highlight **Reset** and press **ENTER/OK**. **Measure Gamut** and **Target RGBW Gamut** values are replaced with factory averages; **Traget MCY Gamut** values are deleted.

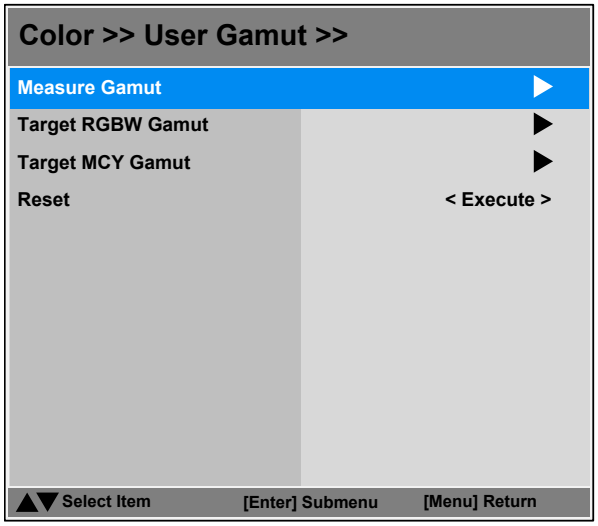

Measure Gamut

Highlight a measured gamut coordinate, then press **ENTER/OK** to open a slider. Use the **LEFT** ◀ and **RIGHT** ▶ arrow buttons to edit the value.

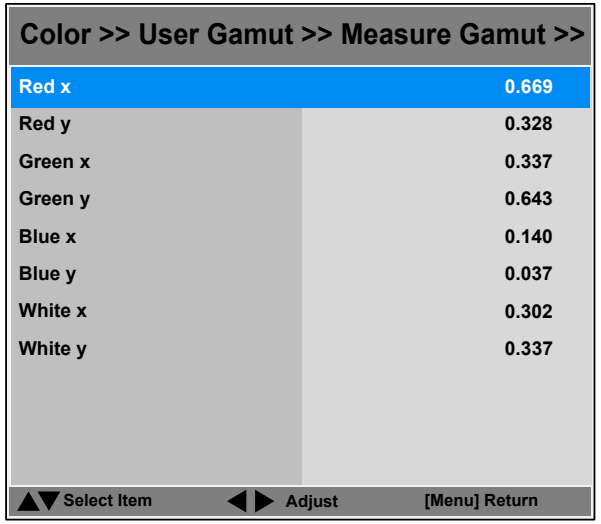

Notes

*The **Projector Controller** software is available for download from the Digital Projection website, free of charge.*

Color menu continued from previous page

Target RGBW Gamut

Highlight a target RGBW gamut coordinate, then press **ENTER/OK** to open a slider. Use the **LEFT** ◀ and **RIGHT** ▶ arrow buttons to edit the value.

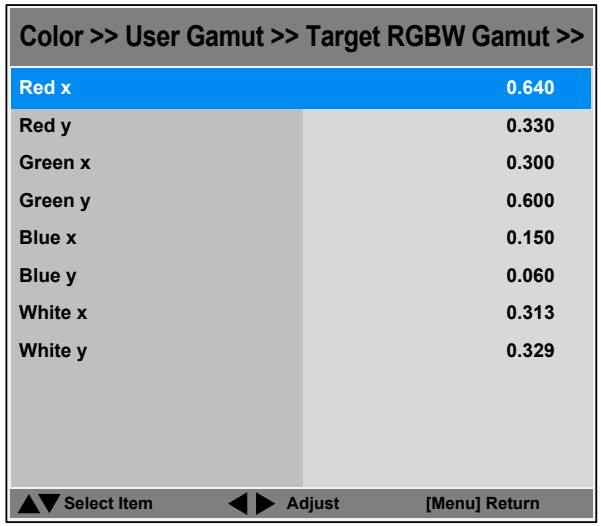

Target MCY Gamut

If you use a P7 color space, you need to enter target MCY gamut values here.

Highlight a target MCY gamut coordinate, then press **ENTER/OK** to open a slider. Use the **LEFT** ◀ and **RIGHT** ▶ arrow buttons to edit the value.

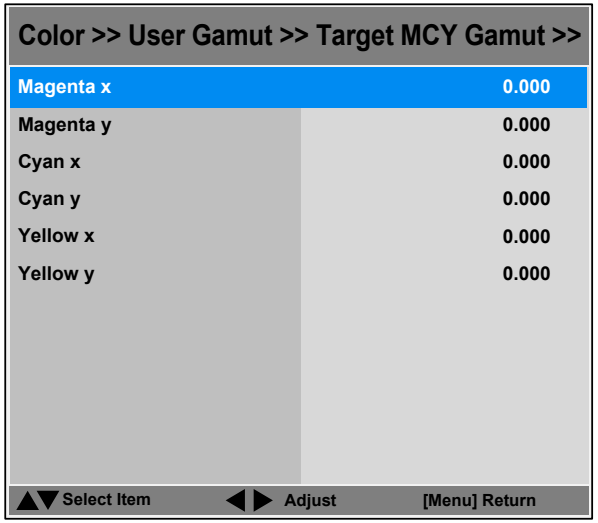

Notes

RGB Lift and Gain

Adjust the RGB lift and gain settings to improve the color balance of the projected image.

Highlight the RGB lift or gain setting you wish to edit, and then press **ENTER/OK** to open a slider. Use the **LEFT** ◀ and **RIGHT** ▶ arrow buttons to edit the value.

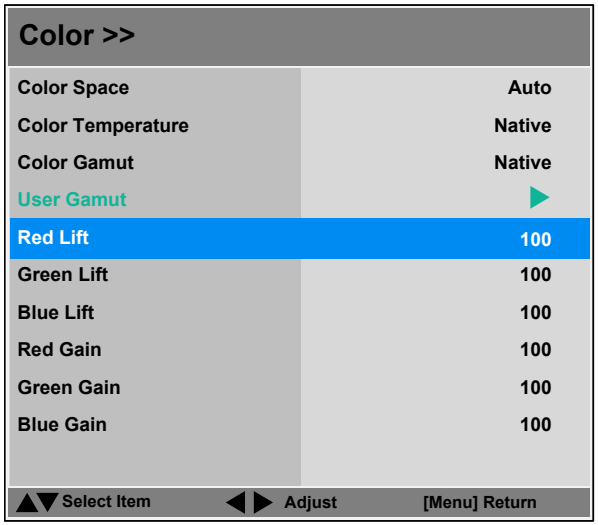

Notes

Geometry menu

This menu allows you to compensate for image distortions caused by an unusual projection angle or irregular screen surface.

There is an option to reset all **Geometry** settings to their factory default values.

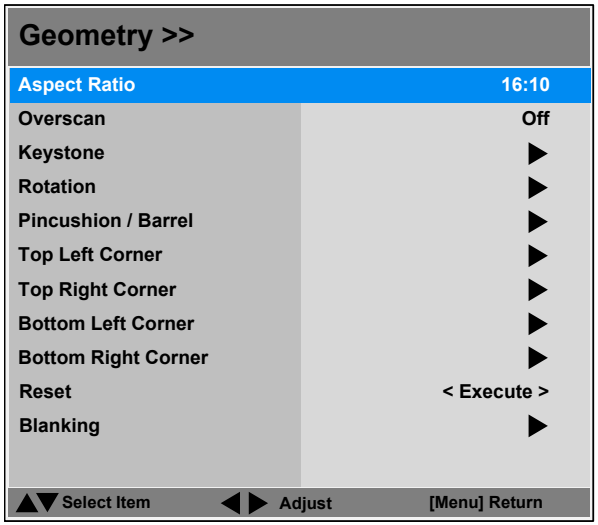

Aspect Ratio

Choose from:

- **16:9**
- **TheaterScope**
- **4:3**
- **4:3 Narrow**
- **16:10**
- **5:4**
- **Source**

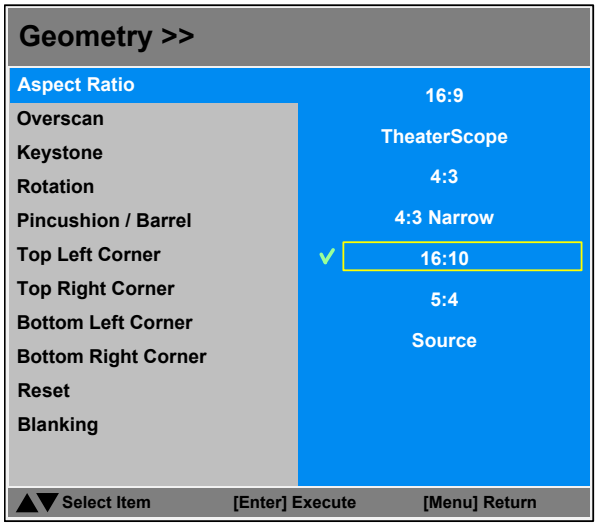

To change the aspect ratio:

1. From the **Main** menu, open **Aspect Ratio**.
2. From the list on the right, select a new aspect ratio and press **ENTER/OK**.

Notes

*Some controls in the **Geometry** menu may be unavailable depending on other settings. For more information, see **Possible Geometry and Edge Blend combinations** further in this guide.*

*For examples of how the different aspect ratios affect screen dimensions, see **Aspect Ratios Explained** in the **Reference Guide**.*

Geometry menu continued from previous page

Overscan

Use this setting to compensate for noisy or badly defined image edges.

Crop removes unwanted artifacts from the edges of your image by cropping the edges. **Zoom** increases the size of the image to force the edges off-screen.

To enable **Overscan**:

1. On the **Main** menu, highlight **Overscan**.
2. Use the **LEFT** ◀ and **RIGHT** ▶ arrow buttons to select **Crop** or **Zoom**.

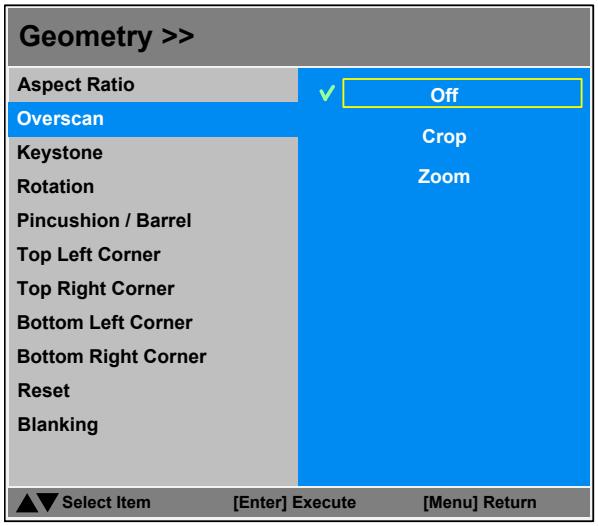

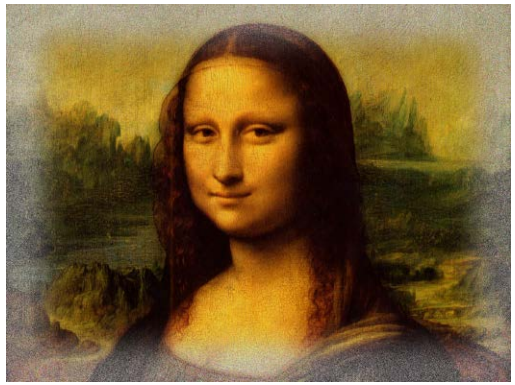

Image with noisy edges

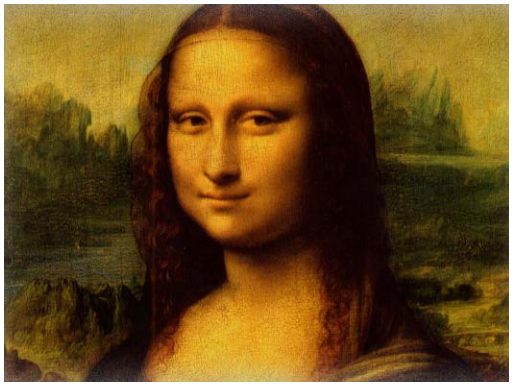

Overscanned image

Notes

Geometry menu continued from previous page

Keystone

Use this setting to compensate for any distortion caused by the projector being in a different horizontal or vertical plane to the screen.

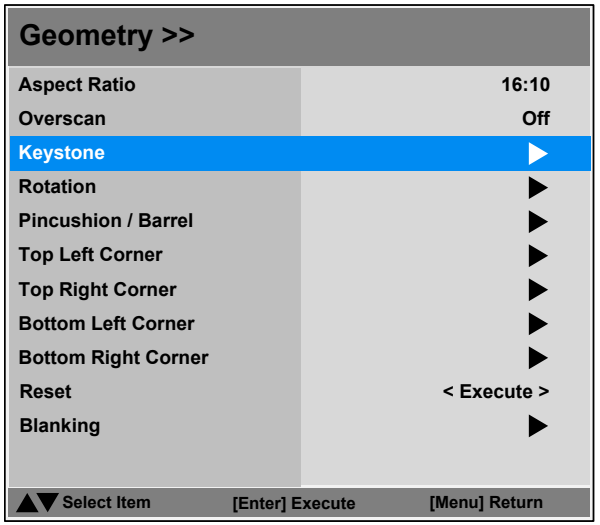

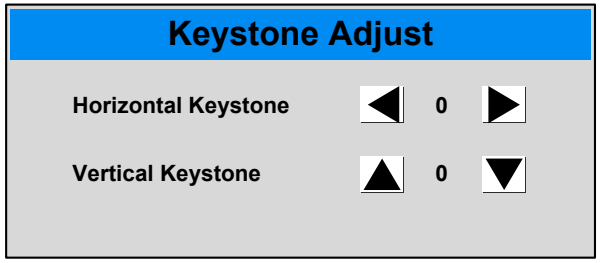

Keystone example

1. The projector is positioned at an angle
2. The resulting image is distorted
3. The image is corrected when Keystone is applied

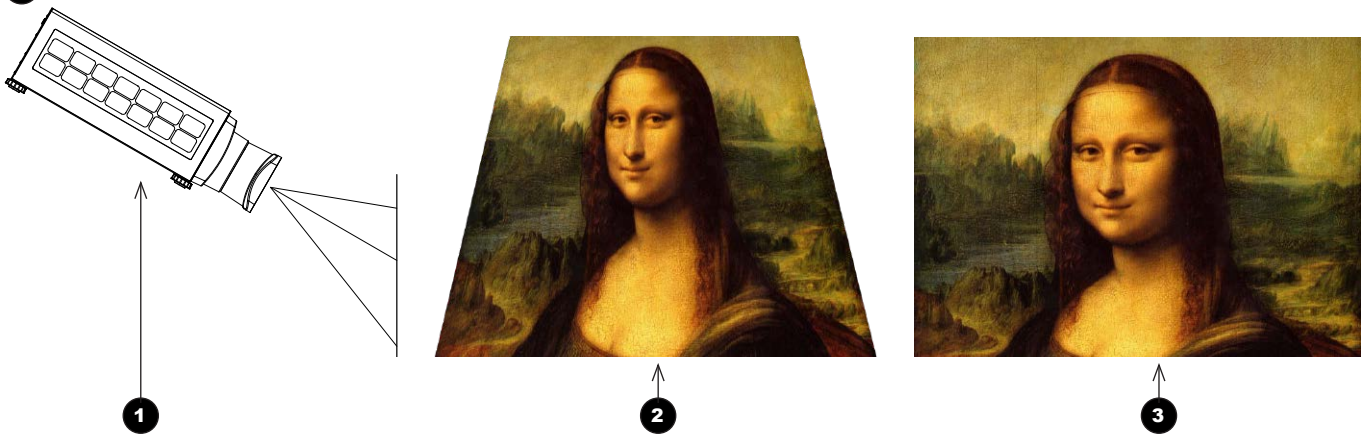

Notes

Keystone *corrections are unavailable when using any of the following:*

- **Rotation**
- **Pincushion / Barrel**
- **Corners**
- **Blanking**
- **Edge Blend**

For more information, see ***Possible Geometry and Edge Blend combinations*** *further in this guide.*

Geometry menu continued from previous page

Keystone settings

1. **Projector to the left**
   The projector is positioned to the left of the screen.
   To correct, apply a positive **Horizontal Keystone** value using the **RIGHT** arrow button.

2. **Projector to the right**
   The projector is positioned to the right of the screen.
   To correct, apply a negative **Horizontal Keystone** value using the **LEFT** arrow button.

3. **Projector high**
   The projector is positioned above the screen at a downward angle.
   To correct, apply a negative **Vertical Keystone** value using the **DOWN** arrow button.

4. **Projector low**
   The projector is positioned below the screen at an upward angle.
   To correct, apply a positive **Vertical Keystone** value using the **UP** arrow button.

5. **Projector straight**
   The projector is directly opposite the screen at a right angle both horizontally and vertically.
   No correction is needed.

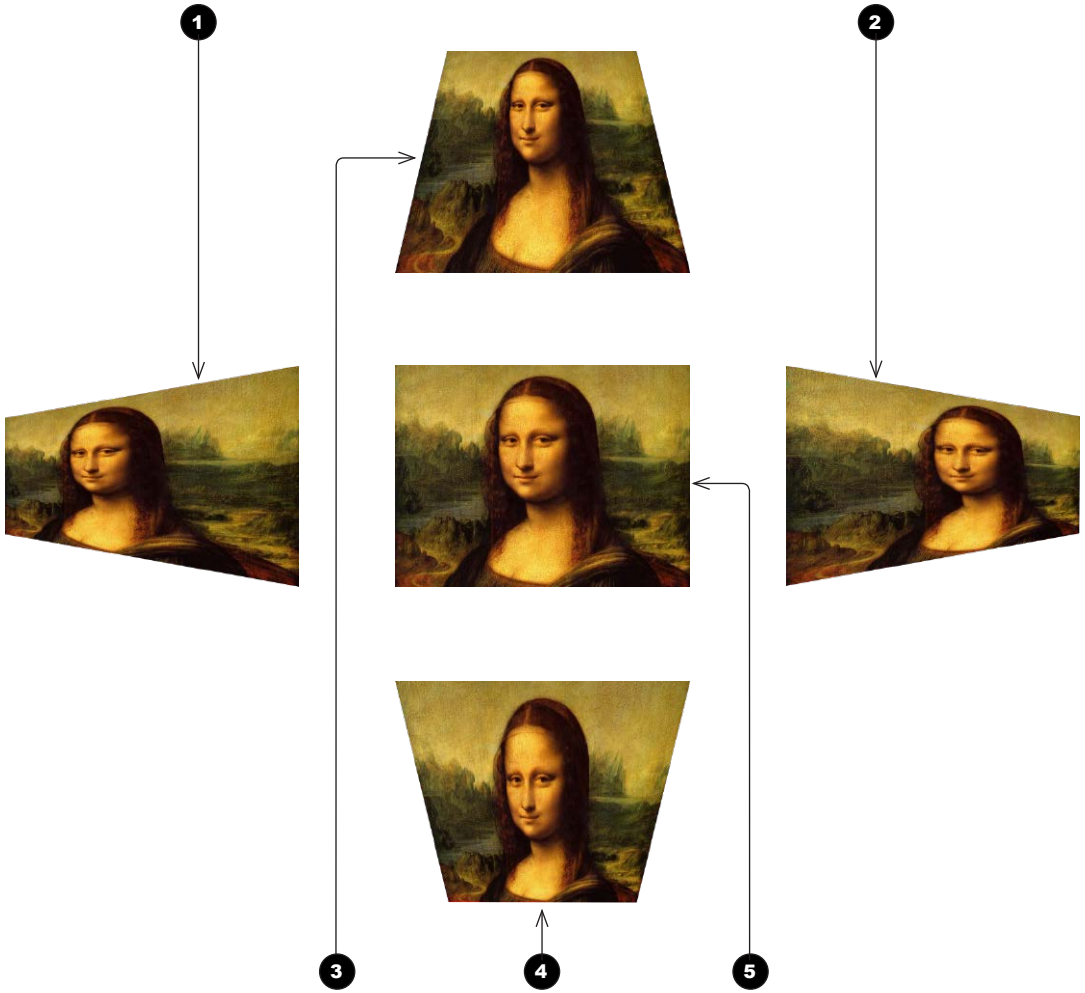

Horizontal and vertical keystone corrections

Notes

Keystone *corrections are unavailable when using any of the following:*

- **Rotation**
- **Pincushion / Barrel**
- **Corners**
- **Blanking**
- **Edge Blend**

For more information, see ***Possible Geometry and Edge Blend combinations*** *further in this guide.*

Geometry menu continued from previous page

Rotation

Rotation example

1. **DMD™ area**
   The DMD™ is not rotated. It still covers the area that would be occupied by the image without correction.

2. **Rotated image**
   The image is smaller than the surrounding DMD™ area. It is scaled in order to remain within the DMD™ area.

3. **Angle of rotation**
   The angle equals a quarter of the **Rotation** setting.
   In this example the angle is 5°, therefore **Rotation = 20**.

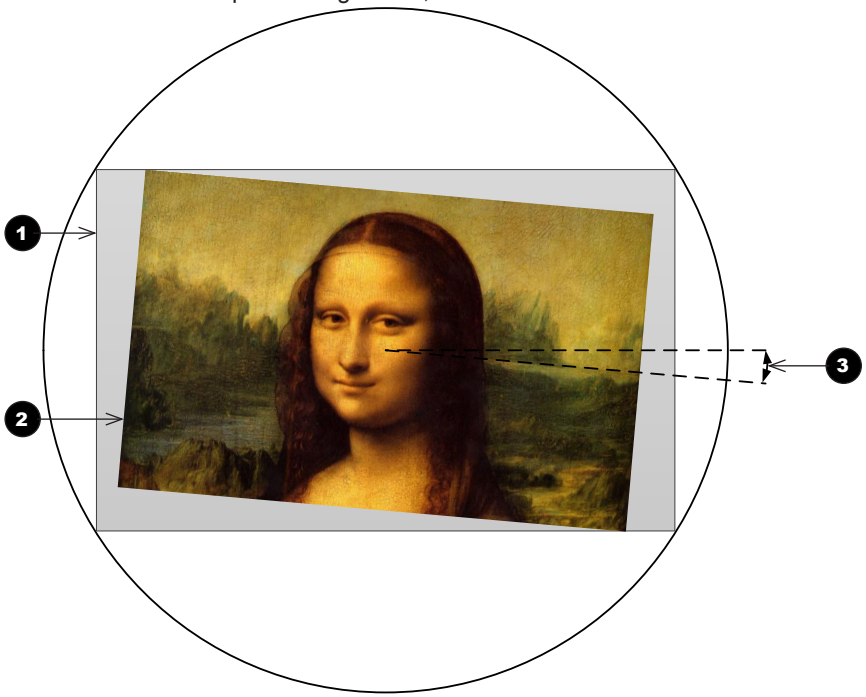

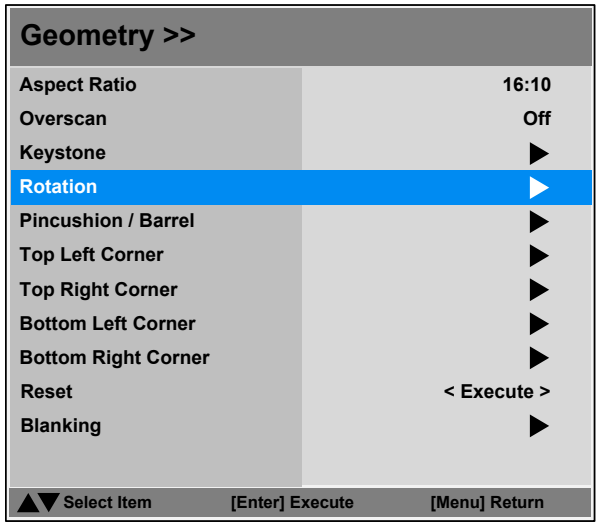

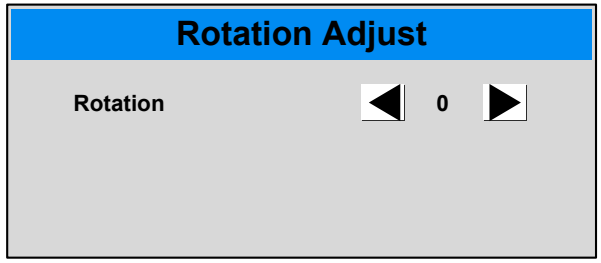

Notes

Rotation *is unavailable when using any of the following:*

- **Keystone**
- **Pincushion / Barrel**
- **Corners**
- **Blanking**
- **Edge Blend**

For more information, see ***Possible Geometry and Edge Blend combinations*** *further in this guide.*

Geometry menu continued from previous page

Pincushion / Barrel

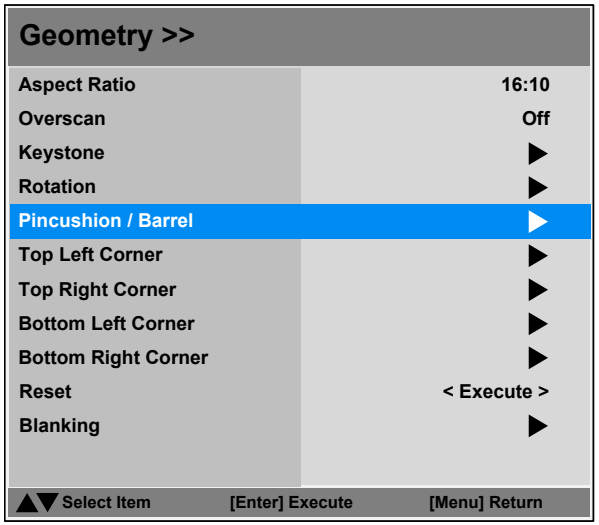

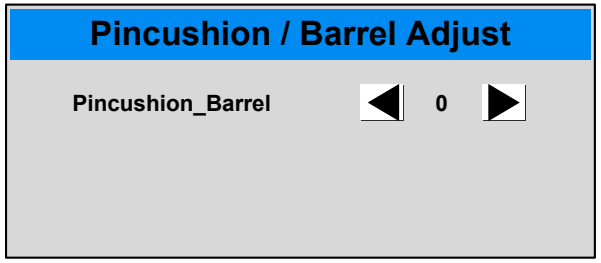

Pincushion / Barrel example

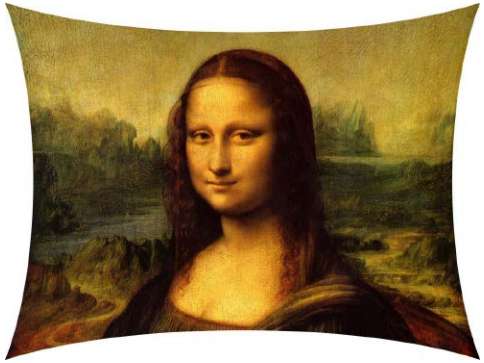

Pincushion

Barrel

Notes

Pincushion / Barrel *is unavailable when using any of the following:*

- **Keystone**
- **Rotation**
- **Corners**
- **Blanking**
- **Edge Blend**

For more information, see ***Possible Geometry and Edge Blend combinations*** *further in this guide.*

Geometry menu continued from previous page

Corners

For each corner, apply horizontal and / or vertical correction as necessary to restore the rectangular shape of the image.

Top Right Corner example

In this illustration, the top right corner requires both horizontal and vertical correction.

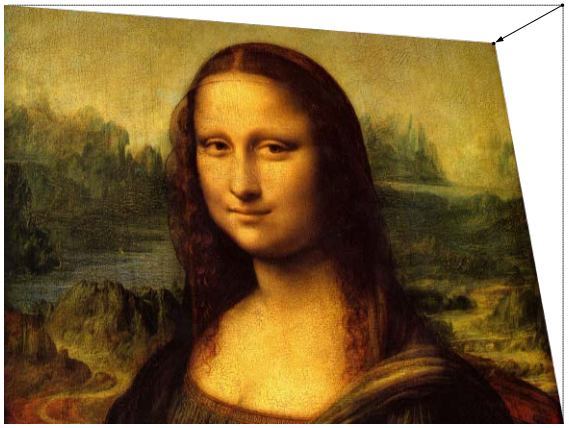

Top Right Corner ***correction***

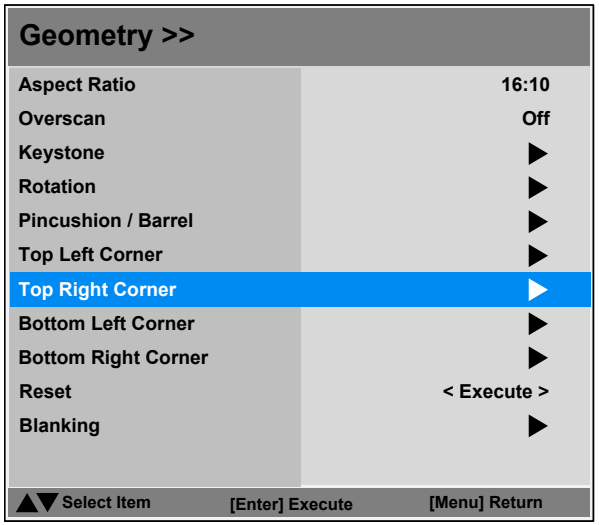

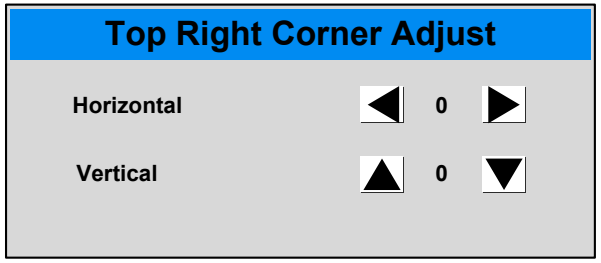

Notes

Corner corrections are unavailable when using any of the following:

- **Keystone**
- **Rotation**
- **Pincushion / Barrel**
- **Black Level Uplift**

For more information, see ***Possible Geometry and Edge Blend combinations*** *further in this guide.*

Geometry menu continued from previous page

Reset

This command allows you to reset all **Geometry** settings apart from **Blanking** and restore the factory default values.

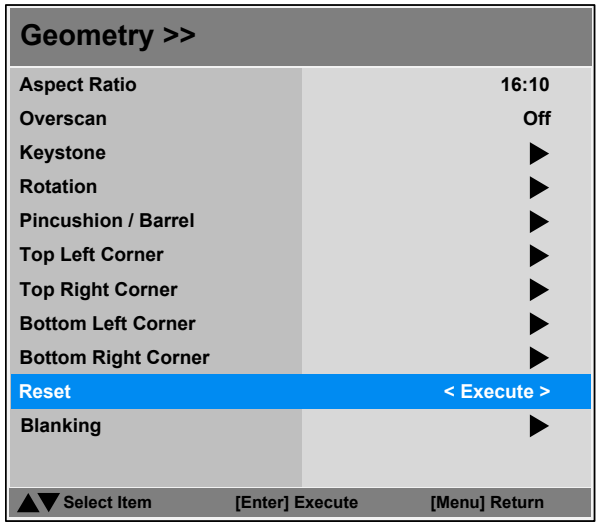

Notes

*The **Reset** command does not apply to **Blanking** settings. The **Blanking** submenu contains its own **Reset** button.*

Geometry menu continued from previous page

Blanking

Select the edge you wish to blank and use the **LEFT** ◀ and **RIGHT** ▶ arrow buttons to determine the amount of correction.

Use the **Reset** command to restore blanked edges.

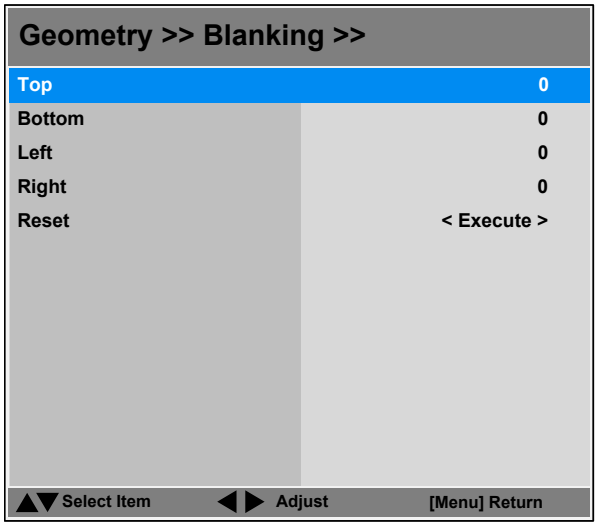

Notes

Blanking *corrections are unavailable when using any of the following:*

- **Keystone**
- **Rotation**
- **Pincushion / Barrel**
- **Black Level Uplift**

For more information, see ***Possible Geometry and Edge Blend combinations*** *further in this guide.*

Edge Blend menu

- **Edge Blend**
  Enable and disable **Edge Blend**
- **Align Pattern**
  When switched on, this feature makes the overlaps more visible and helps adjust the physical position of the projectors in the array.
- **Blend Width**
  Determine the width of the blended regions.
- **Black Level Uplift**
  Adjust black levels to compensate if the blended regions appear brighter than the rest of the image.
- **Reset**
  Reset all **Edge Blend** settings to their factory default values.

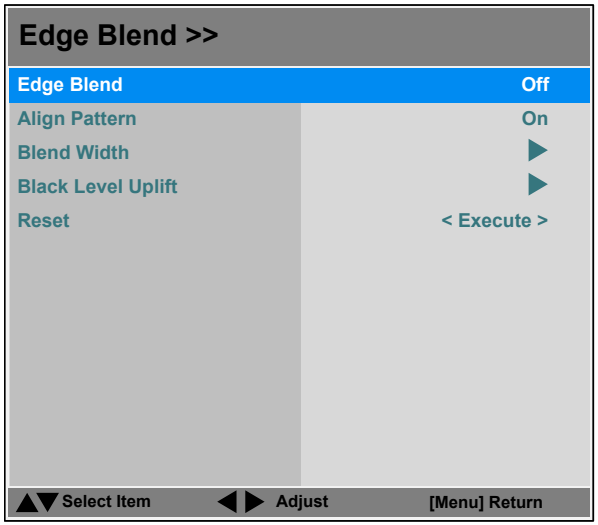

Notes

*When **Edge Blend** is set to **Off**, all other edge blend settings are disabled.*

*Some controls in the **Edge Blend** menu may be unavailable depending on other settings. For more information, see **Possible Geometry and Edge Blend combinations** further in this guide.*

Edge Blend menu continued from previous page

Blend Width

Use the **LEFT** ◀ and **RIGHT** ▶ arrow buttons to set the width of the blended regions:

1. Top
2. Bottom
3. Left
4. Right

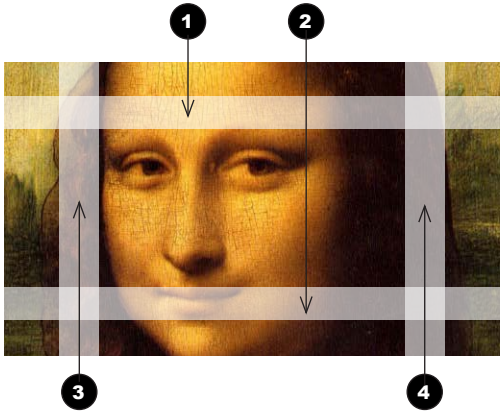

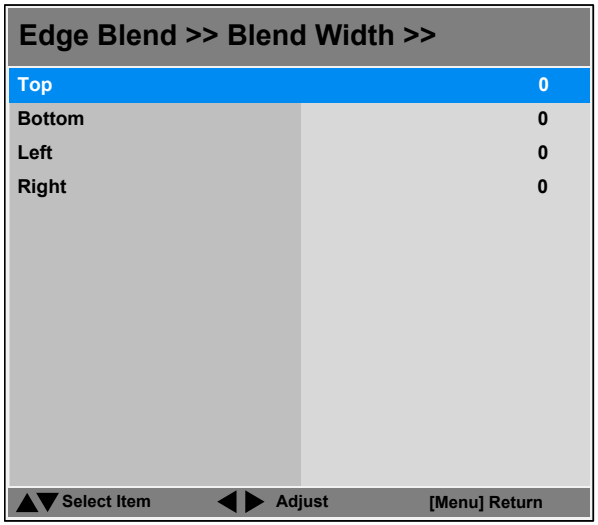

Notes

Some controls in the **Edge Blend** *menu may be unavailable depending on other settings. For more information, see* ***Possible Geometry and Edge Blend combinations*** *further in this guide.*

Edge Blend menu continued from previous page

Black Level Uplift

Black in the blended regions appears less dark than in the rest of the image.

Use this menu to raise black levels in the unblended regions to achieve a uniform black level.

Black level uplift is available for up to two edges, and they must be opposite each other. For example, you can set black level to **Top** and **Bottom**, or to **Left** and **Right**, but not to **Top** and **Left**.

1. **Select Area**

   Stray light from the pond of mirrors of the DMD™ will elevate the black level outside the blended regions. Adjust the slider to align the black level uplift area with the edge of the pond of mirrors. The possible values are 8, 16, 24 and 32 pixels.

   If required, adjust the opposite edge as well.

2. **Adjust**

   Navigate to the **Adjust** group of settings and set **All** to the required amount of black level correction. This will apply equal correction to the black levels of all colors.

   If necessary, use the individual color sliders for fine adjustment.

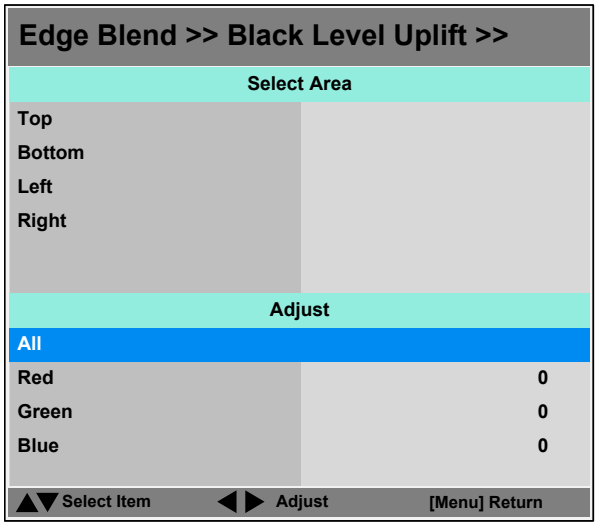

Notes

Availability of black level area controls depends on settings in the **Blend Width** *menu.*

Enable **Align Pattern** *from the* **Edge Blend** *menu to see the black level uplift area.*

Black Level Uplift *is unavailable when using any of the following settings from the* **Geometry** *menu:*

- **Keystone**
- **Rotation**
- **Pincushion** / **Barrel**
- **Corners**
- **Blanking**

For more information, see ***Possible Geometry and Edge Blend combinations*** *further in this guide.*

Possible Geometry and Edge Blend combinations

Some **Geometry** and **Edge Blend** settings cannot be used in combination with others. The table below shows the possible combinations:

	Keystone	Rotation	Pincushion / Barrel	Corners	Blanking	2-side blend	4-side blend	Black Level Uplift
Keystone		✗	✗	✗	✗	✗	✗	✗
Rotation	✗		✗	✗	✗	✗	✗	✗
Pincushion / Barrel	✗	✗		✗	✗	✗	✗	✗
Corners	✗	✗	✗		✓	✓	✓	✗
Blanking	✗	✗	✗	✓		✓	✓	✗
2-side blend	✗	✗	✗	✓	✓			✓
4-side blend	✗	✗	✗	✓	✓			✗
Black Level Uplift	✗	✗	✗	✗	✗	✓	✗	

Notes

3D menu

Use this menu to enable, disable and set up 3D input, as follows:

- **3D Format** — **Off**, **Auto**, **Side by Side (Half)**, **Top and Bottom** and **Dual-Pipe**.
- **3D Swap** — **Normal** and **Reverse** (set to **Reverse** if the left- and right-eye images are displayed in the wrong order)
- **Dark Time** — **0.65 ms**, **1.3 ms**, **1.95 ms** and **2.5 ms**. Set to reduce the effect of images overlapping while the glasses are switching
- **Sync Offset** — use the **LEFT** ◀ and **RIGHT** ▶ arrow buttons to compensate for signal processing delays in the projector.

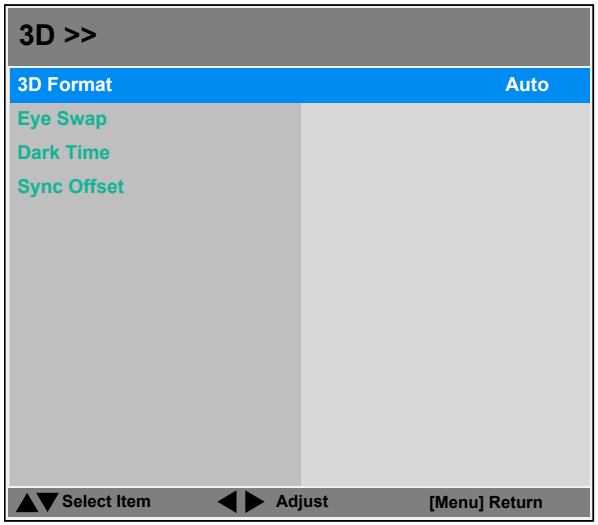

Notes

*For further information about supported 3D formats, see **3D connections** in the **Connection Guide**.*

*If **3D Format** is set to **Off**, or if no 3D signal is detected in **Auto** mode, the following settings will be unavailable:*

- **3D Swap**
- **Dark Time**
- **Sync Offset**

***Frame Sequential** is supported on the DVI input only.*

3D video is only possible on the HDMI, HDBaseT and DVI inputs.

*The **Frame Packing** format is automatically detected by the projector.*

*See also **3D types** and **Some 3D settings explained** further in this guide.*

3D menu continued from previous page

3D types

In most situations you can use the **Auto** setting to have the projector automatically detect the format. Otherwise, consider the notes below to help you set up the 3D input manually.

The following 3D formats are supported:

- **Dual-Pipe (LEFT and RIGHT)**
  The left and right eye images are delivered on two separate HDMI links, which the projector will interleave for 3D display.

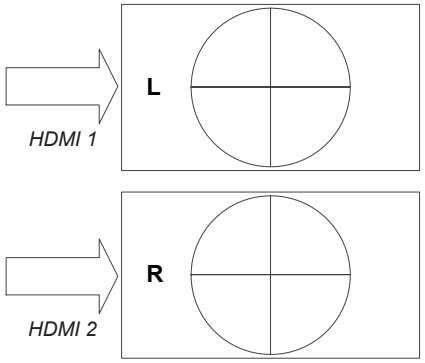

Dual Pipe

- **Frame Packing**
  This format will be detected, re-synchronised, frame-multiplied and displayed at 144 Hz with the left eye / right eye dominance automatically extracted from the video data. You need to optimize **Dark Time** and **Sync Delay** manually to suit your chosen switching glasses.

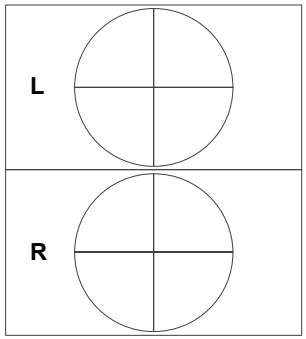

Frame Packing

- **Top and Bottom**
  Sets the projector to reformat the video frames and map them to the display with the left eye / right eye dominance automatically extracted from the video data. You need to optimize **Dark Time** and **Sync Delay** manually to suit your chosen switching glasses.

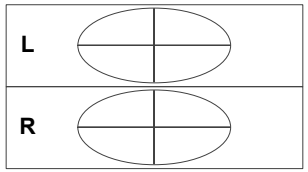

Top-and-Bottom

- **Side by Side (Half)**: interlaced and progressive, 50 and 60Hz
  The side-by-side image will be de-interlaced (if appropriate), resized and then sequentially displayed at 100 or 120 Hz. The left eye / right eye dominance will be automatically extracted from the video data, however you will need to optimize **Dark Time** and **Sync Delay** manually to suit your chosen switching glasses.

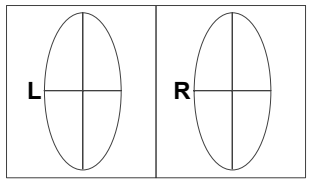

Side-by-Side (Half)

Dark Time and **Sync Delay** need to be set only once, to optimize the image for the glasses in use.

Notes

3D menu continued from previous page

Some 3D settings explained

Dark Time

Ghosting can be caused by the left and right images overlapping during the time that the ZScreen or 3D glasses are switching. **Dark Time** allows you to minimize this effect.

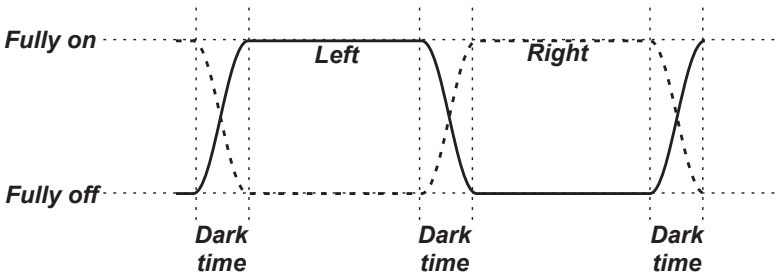

3D Swap

The outgoing 3D frames are in pairs - the dominant frame being presented first. You can determine which frame should be the dominant one.

By convention the default setting is **Left**.

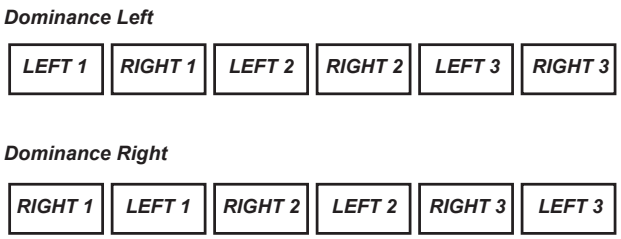

Sync Offset

The sync signal from the 3D server will be in phase with the frames generated by its graphics card. However, to compensate for processing delays in the projector, **Sync Offset** introduces a delay to the sync output signal sent to the ZScreen or 3D glasses.

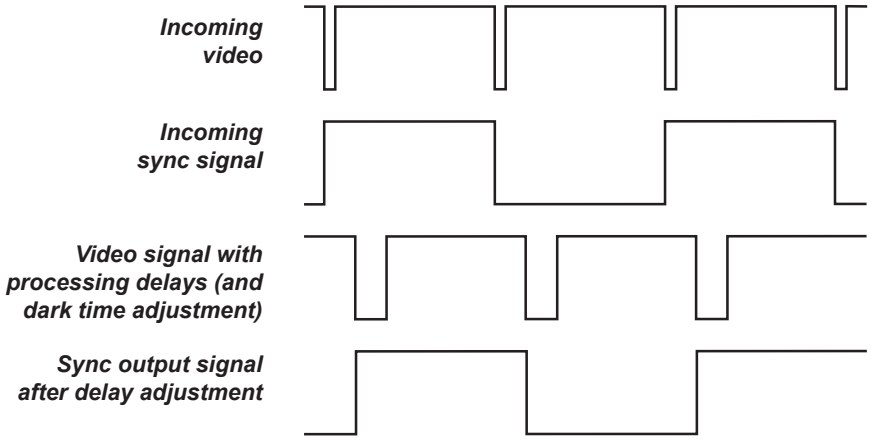

Notes

In order to achieve maximum light output and a smooth grayscale, whilst eliminating ghosting, the following procedure is recommended:

1. *Set* **Dark Time** *to a value appropriate to the glasses or ZScreen, say 1.3 ms or 1.95 ms.*
2. *Adjust* **Sync Offset** *time to eliminate ghosting and achieve a smooth grayscale.*
3. *Repeat steps 1 and 2 until the best result is obtained.*

3D menu continued from previous page

Frame rate multiplication in 3D images

When displaying a low frame rate 3D video, the projector multiplies the frame rate to obtain a flicker-free image. For example, a 60Hz frame rate is doubled to 120 Hz, or a 48 Hz frame rate is tripled to 144 Hz.

Frame rate multiplication is an automatic process. It occurs in the background and cannot be modified by the user.

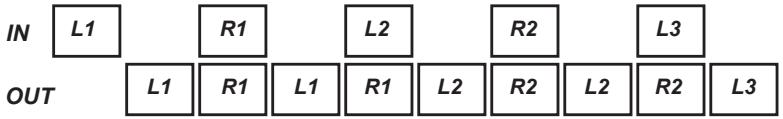

x2 example

Notes

Laser menu

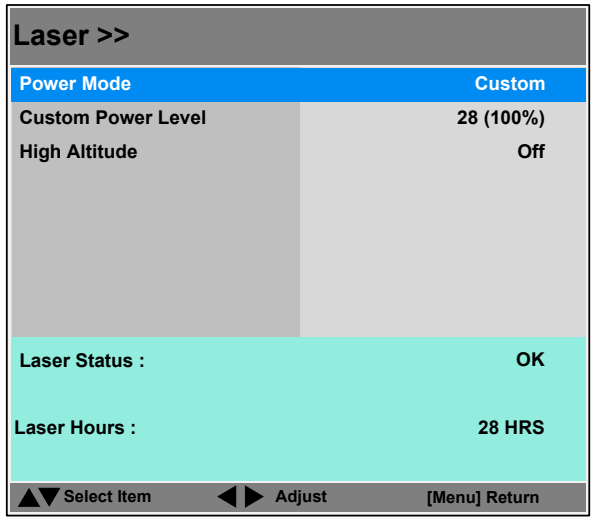

- **Power Mode**
  - **Eco** will automatically set the laser power to 30%.
  - **Normal** will set the power to 100%.
  - Set to **Custom** if you wish to adjust the power manually.
  - **Quiet** reduces the noise level, running at up to 75% laser power.

- **Custom Power Level**

  This setting is only available if **Power Mode** is set to **Custom** or **Quiet**.

  Use the slider to set laser power:
  - If **Power Mode** is set to **Custom**, choose a value between 1 and 28, ranging from 30% to 100% laser power in 2.5% increments.
  - If **Power Mode** is set to **Quiet**, choose a value between 1 and 9, ranging from 30% to 75% laser power in 5% increments.

- **High Altitude**

  On increases the fan speed to compensate for reduced air density at high altitude.

The following menu items show information only:

- **Laser Status**
- **Laser Hours**

Notes

Setup menu

- **Orientation**
  Choose from **Desktop Front**, **Ceiling Front**, **Desktop Rear** and **Ceiling Rear**.
- **Auto Power Off**
  Set this to **On** if you want the projector to go into STANDBY mode when no input source is detected for 20 minutes.
- **Auto Power On**
  - Set this to **On** if you want the projector to start up immediately when the mains is connected.
  - Set this to **Off** if you want the projector to go into STANDBY mode when the mains is connected. In this case, the projector will not start up until the **POWER** button is pressed on the control panel or the remote control.
- **Startup Logo**
  Set this to **On** if you want the DP logo to show when the projector is first switched on.
- **Blank Screen**
  Choose from **Logo**, **Black**, **Blue** and **White**.
- **Trigger1** and **Trigger 2**
  Choose from **Screen**, **16:9**, **TheaterScope**, **4:3**, **4:3 Narrow** or **RS232** to determine what will cause each trigger output to activate.
- **Auto-Source**
  If this setting is **On**, the projector will automatically search for an active input source.
- **Infrared Remote**
  Enable and disable the remote control. Assign and unassign an IR code
- **Network**
  Access this submenu to set up a LAN network connection.
- **On Screen Display**
  Access this submenu to adjust the appearance and position of the on-screen display.
- **Presets**
  Access this submenu to save up to four presets containing custom combinations of image settings, or to recall a saved preset.

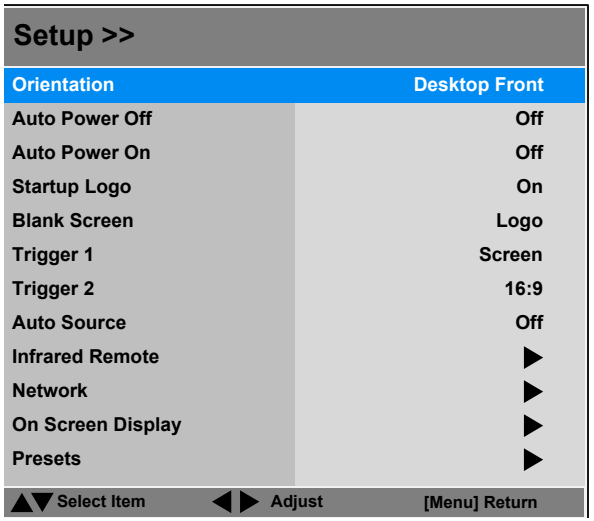

Notes

Setup menu continued from previous page

Infrared Remote

- **IR Enable**

  Set to **Off** if you wish to disable the remote control.

- **IR Code**

  The projector and the remote control need a matching IR code: a two-digit number between ***00*** and ***99***.

  The default IR code is ***00***. This is also a master code, which, if assigned to a remote, will work regardless of the value assigned to the projector.

  To assign an IR code for the projector:

  1. Select **IR Code**.
  2. Use the **LEFT** ◀ and **RIGHT** ▶ arrow buttons to navigate between the first and the second digit. Use the **UP** ▲ and **DOWN** ▼ arrow buttons to change the values.

  To assign an IR code for the remote:

  1. Press and hold the **ADDR** button on the remote until the indicator starts flashing.
  2. Release the **ADDR** button and while the indicator is still flashing, enter a two-digit address using the numeric input buttons. The indicator will flash three times quickly to confirm the change.

- **IR Code Reset**

  Use this command to unassign an IR code from the projector. This will revert the **IR Code** value to 00.

  To unassign an IR code from the remote control,

  - Press and hold **ALT** and **ADDR** simultaneously until the indicator flashes to confirm the change.

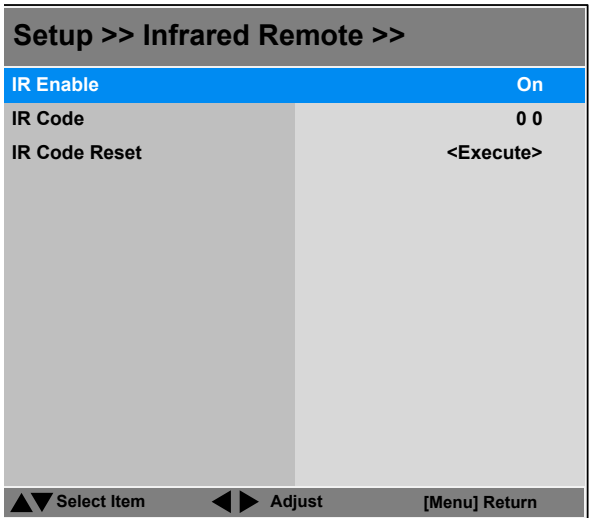

Notes

*If you turn the remote control off, you can only turn it back on again from the control panel or via the **Projector Controller** application.*

*The **Projector Controller** software is available for download from the Digital Projection website, free of charge.*

*A wired remote control will also be disabled if **IR Enable** is set to **Off**.*

Setup menu continued from previous page

Network

Set **DHCP** to **On** if the IP address is to be assigned by a DHCP server, or **Off** if it is to be set here.

- If **DHCP** is set to **On**, it will not be possible to edit **IP Address**, **Subnet Mask**, **Gateway** or **DNS**.
- If **DHCP** is set to **Off**:
  1. Edit **IP Address**, **Subnet Mask**, **Gateway** and **DNS** as required.
  2. Select **Apply Settings** and press **ENTER**.

Standby Power

If this setting is **On**, the LAN socket remains active when the projector is in STANDBY mode. If the setting is **Off**, the LAN socket is disabled when the projector is in STANDBY mode.

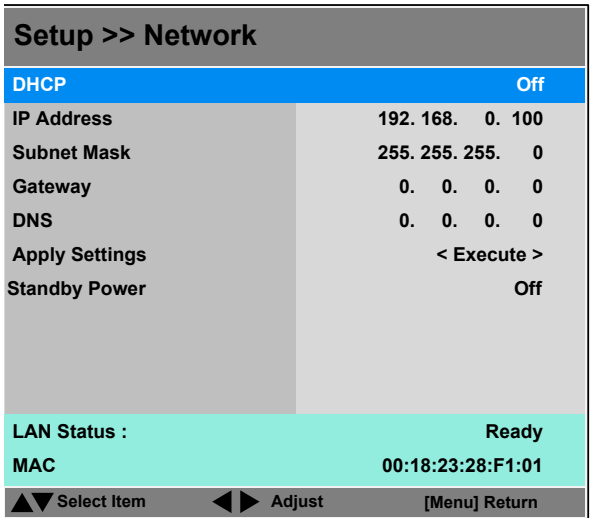

Notes

Setup menu continued from previous page

On Screen Display

- **Position**
  Select from the list where you want the OSD to appear on the screen.
- **Transparency**
  Choose between **0%** (no transparency), **25%**, **50%** and **75%**.
- **Timeout**
  The menus will disappear if no buttons are pressed within the selected length of time. If you want the menus to remain on screen permanently, then select **Always On**.
- **Messaging**
  If you do not want status messages to be displayed, set this to **Off**.

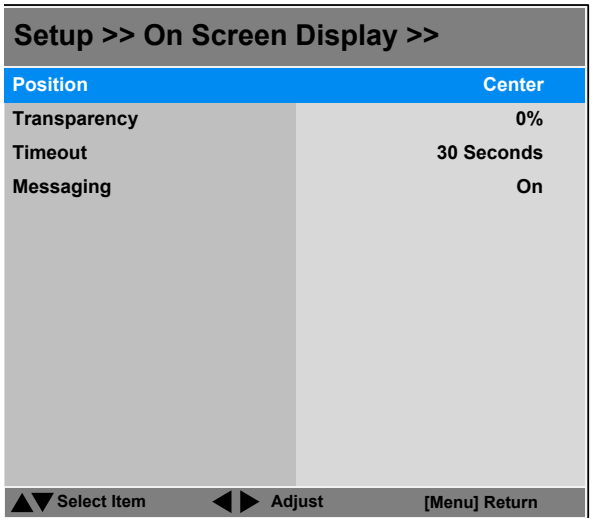

Notes

Setup menu continued from previous page

Presets

The current image settings can be saved as a preset, which you can recall later. The default settings can be recalled at any time as well.

Up to four custom presets can be stored for each input.

The following settings are saved in a preset:

- From the **Image** menu — **Brightness**, **Contrast**, **Gamma**, **Adaptive Contrast**, **Saturation**, **Hue**, **Sharpness** and **Noise Reduction**
- From the **Color** menu — **Colorspace**, **Color Temperature**, **Color Gamut**, **RGB Lift** and **RGB Gain**
- From the **Geometry** menu — **Aspect Ratio** and **Overscan**

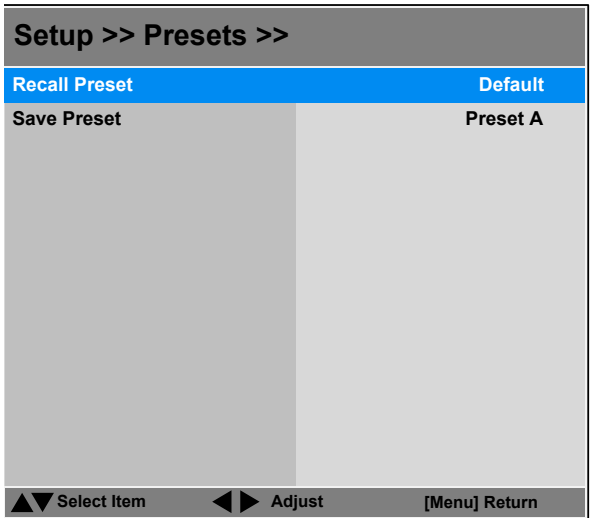

To recall a saved preset:

- Highlight **Recall Preset** and then use the **LEFT** ◀ and **RIGHT** ▶ arrow buttons to select preset **A**, **B**, **C**, **D**, or **Default**.

To save a preset:

- Highlight **Save Preset** and then use the **LEFT** ◀ and **RIGHT** ▶ arrow buttons to select preset **A**, **B**, **C**, or **D**.

Press **MENU** to leave the **Presets** page.

Notes

Presets from one input cannot be applied to another input.

Information menu

This menu gives information about software and hardware configuration, input source and laser operating times It also allows you to restore the factory default settings.

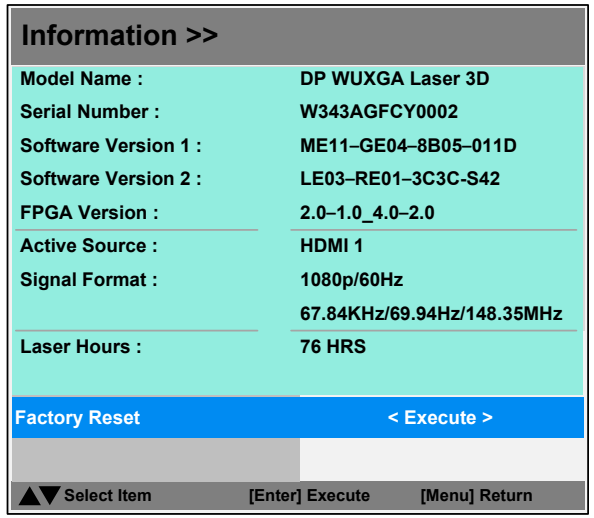

Factory Reset

To restore the factory default settings:

1. Navigate to **Factory Reset** and press **ENTER**/**OK**.
2. When prompted, use the **LEFT** ◀ and **RIGHT** ▶ arrow buttons to highlight the **Yes** button and then press **ENTER**/**OK** to confirm your choice.

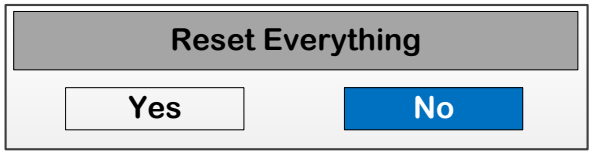

Notes

DIGITAL PROJECTION

HIGHlite Laser 3D Series

High Brightness Digital Video Projector

REFERENCE GUIDE

Rev C February 2015

IN THIS GUIDE

The DMD™ 74

Choosing A Lens 76
- Basic calculation 77
- Basic calculation example 78
- Full lens calculation 79
  - Introducing TRC 79
  - Calculating TRC 80
  - Calculating the throw ratio with TRC 81
- Full lens calculation example 82

Screen Requirements 83
- Fitting the image to the DMD™ 83
  - WUXGA images displayed full width 83
  - WUXGA images displayed with a height of 1080 pixels 84
  - WUXGA images displayed full height 85
- Diagonal screen sizes 86
- Fitting the image to the screen 87
- Positioning the screen and projector 88

Positioning The Image 89
- Maximum offset range 91

Aspect Ratios Explained 92
- Aspect ratio examples 93

Frame Rates And Pulldowns Explained 95
- Interlaced and progressive scan 95
- Frame rates of image sources 95
- Pulldowns - conversion into destination formats 96
  - 2:3 (normal) pulldown 96
  - 2:3:3:2 (advanced) pulldown 97

Appendix A: Lens Part Numbers 98

Appendix B: Lens Charts 99
- How to use the lens charts 99
  - TRC values applied in the charts 100
  - Full DMD™ width images 101
  - 1.25:1 images 102
  - 1.33:1 images 103

Appendix C: Supported Signal Input Modes 104
- 2D input modes 104
- 3D input modes 106

Appendix D: Menu Map 107
- MAIN 107
- LENS 107
- IMAGE 107
- COLOR 108
- GEOMETRY 109
- EDGE BLEND 110
- 3D 110
- LASER 110
- SETUP 111
- INFORMATION 112

IN THIS GUIDE (continued)

Appendix E: Wiring Details 113
Signal inputs and outputs 113
VGA 113
HDMI 1 and 2 114
DVI 115
3G-SDI In, 3G-SDI Out 116
Component 1 116
Component 2 116
Control connections 117
LAN 117
RS232 117
Trigger 1 & Trigger 2 118
IR input 118
USB 118
3D Sync IN and 3D Sync OUT 118
Appendix F: Glossary Of Terms 119
Technical Specifications 130
Models 130
Inputs and outputs 131
Bandwidth 131
Remote control and keypad 131
Automation control 131
Color temperature 131
Lenses 132
Lens mount 132
Mechanical mounting 132
Orientation 132
Electrical and physical specifications 133
Safety & EMC regulations 133

The DMD™

A DMD™ (Digital Micromirror Device™) is a true digital light modulator which utilises an array of up to 2.3 million moving aluminium mirrors, with each one representing a pixel in the final projected image. The outermost micromirrors in the array remain inactive (***pond of mirrors***) and are not used in constructing the image.

1. **Casing**
2. **Light shield**
3. **Pond of mirrors**
4. **Array**

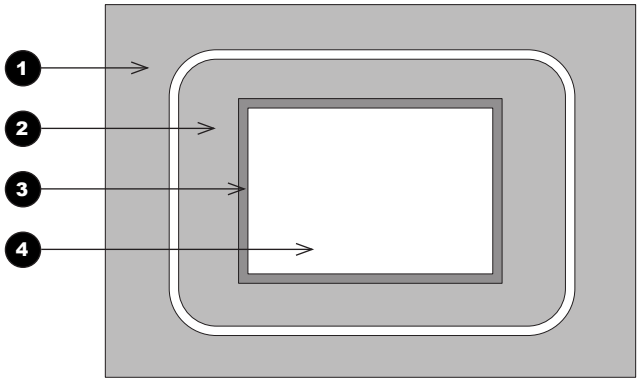

DMD™

Each mirror element is suspended over address electrodes by a torsion hinge between two posts.

1. **Support posts**
2. **Mirror element**
3. **Torsion hinges**
4. **Offset address electrode**

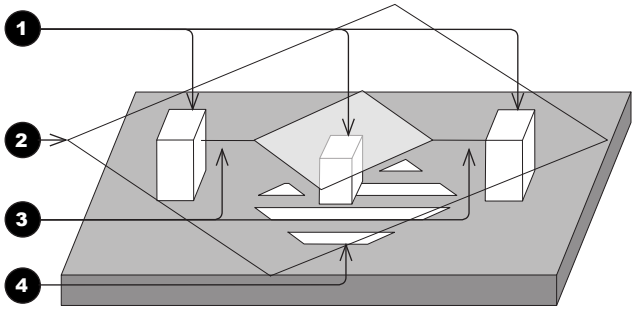

Mirror element with tilt mechanism

Notes

Depending on the voltage polarity applied, each mirror will either tilt to the left to produce a bright pixel or to the right for a dark pixel. When light is applied to the complete DMD™, only the light redirected from a mirror tilting to the left is projected.

1. **Projection lens**
2. **Incoming light from the illumination module**
3. **Mirror element tilted to the right**
4. **Mirror element tilted to the left**
5. **Reflected light, left tilt**
6. **Light dump**
7. **Reflected light, right tilt**

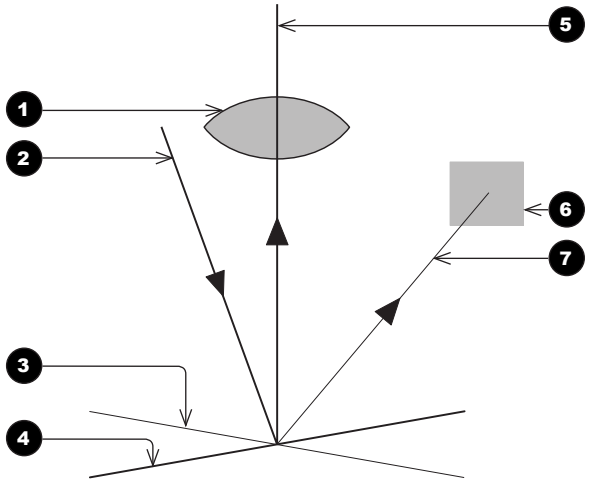

Light flow

The projector optically filters white light from the illumination module into its constituent red, green and blue. Each color illuminates a separate DMD™ whose modulated output is then recombined with the other two to form the projected full color image.

1. **Illumination module**
2. **Optical filtering of light into red, green and blue**
3. **Projection lens**
4. **DMD™ devices**
5. **Full color image displayed on screen**

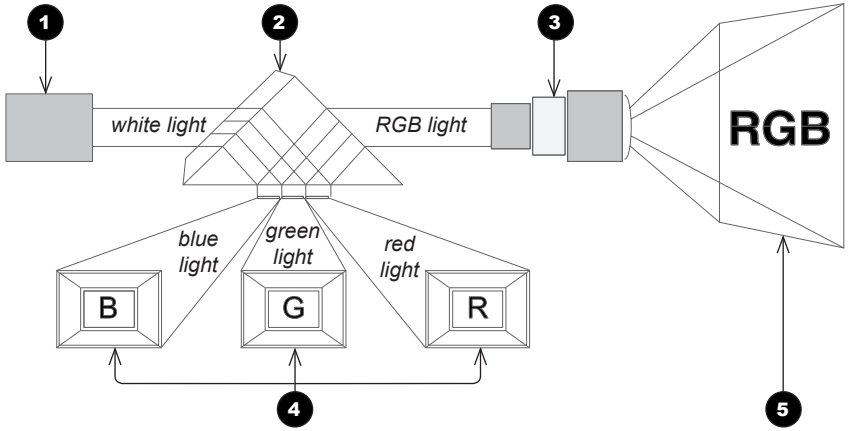

Filtering process

Notes

Choosing A Lens

A number of lenses are available. Which lens you choose depends on the screen size, image aspect ratio, throw distance and light output.

The following table shows all available lenses in order of their ***throw ratios***:

Throw ratios	Throw distance range
0.77 : 1 fixed lens	1.3 - 2.5 m (4.3 - 8.2 ft)
1.16 : 1 fixed lens	1.4 - 6.2 m (4.6 - 20.3 ft)
1.45 - 1.74 : 1 zoom lens	1.8 - 9.3 m (5.9 - 30.5 ft)
1.74 - 2.17 : 1 zoom lens	2.2 - 11.8 m (7.2 - 38.7 ft)
2.17 - 2.90 : 1 zoom lens	2.7 - 15.4 m (8.9 - 50.5 ft)
2.90 - 4.34 : 1 zoom lens	3.6 - 22.5 m (11.8 - 73.8 ft)
4.34 - 6.76 : 1 zoom lens	5.5 - 35 m (18 - 114.8 ft)

To choose a lens, either calculate the ***throw ratio*** required, or use the ***lens charts*** provided within this section.

Notes

For information about individual lens part numbers, see ***Appendix A*** *at the end of this document.*

Do not use the short lens hood with the long throw lens.

For further information about using the right lens and hood, see ***The lens hood*** *in the* ***Installation and Quick-Start Guide****.*

Basic calculation

Identify the required lens by calculating the ***throw ratio***.

A ***throw ratio*** is the ratio of the throw distance to the screen width:

$$\text{Throw ratio} = \frac{\text{Throw distance}}{\text{Screen width}}$$

1. Use the formula above to obtain the required throw ratio.
2. Match the throw ratio with a lens from the table below:

Throw ratios	Throw distance range
0.77 : 1 fixed lens	1.3 - 2.5 m (4.3 - 8.2 ft)
1.16 : 1 fixed lens	1.4 - 6.2 m (4.6 - 20.3 ft)
1.45 - 1.74 : 1 zoom lens	1.8 - 9.3 m (5.9 - 30.5 ft)
1.74 - 2.17 : 1 zoom lens	2.2 - 11.8 m (7.2 - 38.7 ft)
2.17 - 2.90 : 1 zoom lens	2.7 - 15.4 m (8.9 - 50.5 ft)
2.90 - 4.34 : 1 zoom lens	3.6 - 22.5 m (11.8 - 73.8 ft)
4.34 - 6.76 : 1 zoom lens	5.5 - 35 m (18 - 114.8 ft)

3. Ensure the required throw distance is within the range covered by the lens.

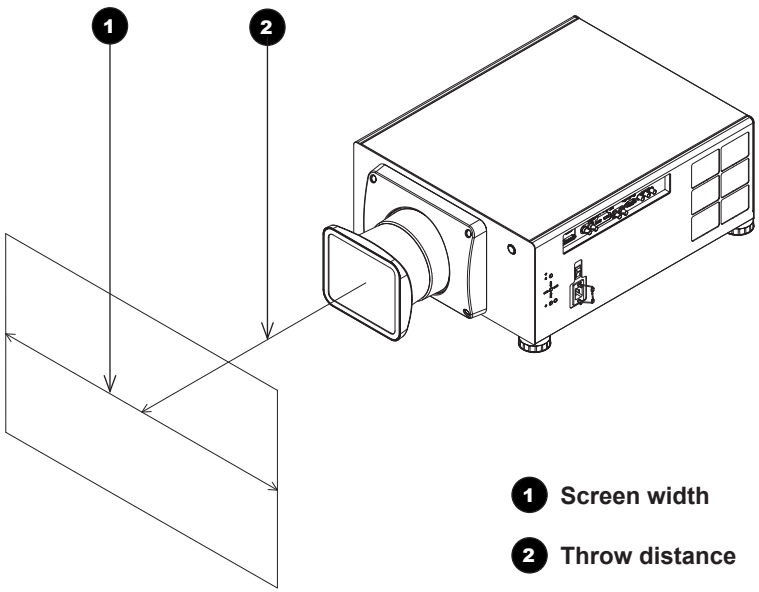

1 **Screen width**

2 **Throw distance**

Notes

The basic calculation on this page does not take into consideration DMD™ and image size, which could affect the throw ratio. For a more complex and realistic calculation, see ***Full lens calculation*** *in this section.*

When calculating the throw ratio, be sure to use identical measurement units for both the throw distance and the screen width.

For information about individual lens part numbers, see ***Appendix A*** *at the end of this document.*

Do not use the short lens hood with the long throw lens.

For further information about using the right lens and hood, see ***The lens hood*** *in the* ***Installation and Quick-Start Guide****.*

Basic calculation example

1. **Calculate the throw ratio using the formula.**

   Your screen is ***4.5 m*** wide and you wish to place the projector approximately ***11 m*** from the screen. The throw ratio will then be

   $$\frac{11}{4.5} = \mathbf{2.44}$$

2. **Match the result with the lens table.**

   The lens matching a throw ratio of 2.44 is ***the 2.17 - 2.90 : 1 zoom lens***.

3. **Check whether the lens covers the required throw distance.**

   The range quoted for the 2.17 - 2.90 : 1 zoom lens is ***2.7 - 15.4 m***. The required distance of 11 m is within the range.

INFORMATION YOU NEED FOR THIS CALCULATION

- The throw ratio formula:

$$\text{Throw ratio} = \frac{\text{Throw distance}}{\text{Screen width}}$$

- The lens table:

Throw ratios	Throw distance range
0.77 : 1 fixed lens	1.3 - 2.5 m (4.3 - 8.2 ft)
1.16 : 1 fixed lens	1.4 - 6.2 m (4.6 - 20.3 ft)
1.45 - 1.74 : 1 zoom lens	1.8 - 9.3 m (5.9 - 30.5 ft)
1.74 - 2.17 : 1 zoom lens	2.2 - 11.8 m (7.2 - 38.7 ft)
2.17 - 2.90 : 1 zoom lens	2.7 - 15.4 m (8.9 - 50.5 ft)
2.90 - 4.34 : 1 zoom lens	3.6 - 22.5 m (11.8 - 73.8 ft)
4.34 - 6.76 : 1 zoom lens	5.5 - 35 m (18 - 114.8 ft)

Notes

The basic calculation on this page does not take into consideration DMD™ and image size, which could affect the throw ratio. For a more complex and realistic calculation, see ***Full lens calculation*** *in this section.*

For information about individual lens part numbers, see ***Appendix A*** *at the end of this document.*

Full lens calculation

Introducing TRC

The choice of lens will affect the image size and will address discrepancies between the DMD™ resolution and the source.

When an image fills the height of the DMD™ but not the width, it uses less than 100% of the DMD™ surface. A lens chosen using the basic formula may produce an image that is considerably smaller than the actual screen.

To compensate for loss of screen space in such situations, you need to increase the throw ratio using a ***Throw Ratio Correction (TRC)***.

Example

Fig. 1 illustrates a 4:3 image within a WUXGA DMD™.

When a WUXGA projector is used for a 4:3 image, the image does not fill the width of the DMD™, creating a ***pillarboxing*** effect - blank spaces to the left and right.

Fig. 2 shows the same image projected on a 4:3 screen using a standard lens (chosen with the basic calculation).

The DMD™ accurately fills the width of the screen; however, the pillarboxing is now part of the projected image and is transferred to the screen.

The DMD™ does not fill the height of the screen, which has caused ***letterboxing*** - further blank spaces at the top and bottom of the screen.

The image is now surrounded by blank space, which can be removed if the throw ratio is increased.

Fig. 3 shows the image projected on the same screen with a lens chosen using TRC.

The increased throw ratio has allowed the 4:3 image to fill the 4:3 screen seamlessly.

Fig. 1

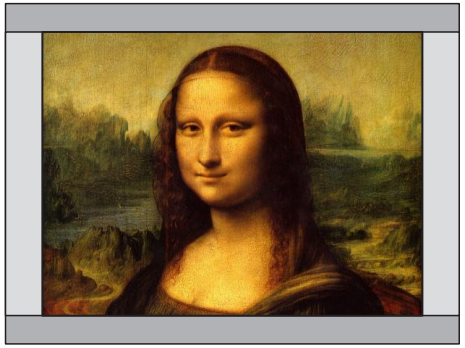

Fig. 2

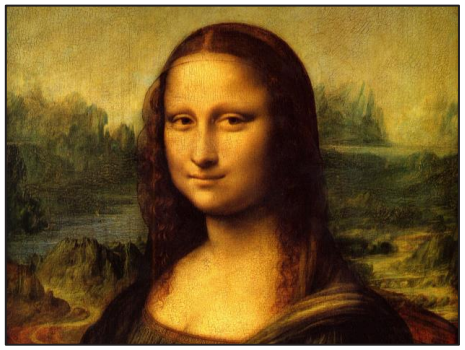

Fig. 3

Notes

TRC can only be applied if greater than 1. If TRC is 1 or less, disregard it and calculate the throw ratio using the basic formula.

Calculating TRC

To calculate TRC, use the following formula:

$$TRC = \frac{1.6\ (DMD™\ aspect\ ratio)}{Source\ aspect\ ratio}$$

TRC table

Alternatively, you can save time by referencing the following table, which shows the TRC value for some popular image formats:

2.35:1 (Scope), 1920 x 817 pixels	TRC < 1, not used
1.85:1 (Flat), 1920 x 1037 pixels	TRC < 1, not used
1.78:1 (16:9), 1920 x 1080	TRC < 1, not used
1.66:1 (Vista), 1792 x 1080 pixels	TRC < 1, not used
1.6:1 (16:10), 1728 x 1080 pixels	TRC = 1, not used (native resolution)
1.33:1 (4:3), 1440 x 1080 pixels	TRC = 1.2
1.25:1 (5:4), 1350 x 1080 pixels	TRC = 1.28

Notes

TRC can only be applied if greater than 1. If TRC is 1 or less, disregard it and calculate the throw ratio using the basic formula.

Calculating the throw ratio with TRC

1. For TRC > 1, amend the basic throw ratio formula as follows:

$$\text{Throw ratio} = \frac{\text{Throw distance}}{\text{Screen width} \times \text{TRC}}$$

2. Once a throw ratio is established, identify the matching lens from the table:

Throw ratios	Throw distance range
0.77 : 1 fixed lens	1.3 - 2.5 m (4.3 - 8.2 ft)
1.16 : 1 fixed lens	1.4 - 6.2 m (4.6 - 20.3 ft)
1.45 - 1.74 : 1 zoom lens	1.8 - 9.3 m (5.9 - 30.5 ft)
1.74 - 2.17 : 1 zoom lens	2.2 - 11.8 m (7.2 - 38.7 ft)
2.17 - 2.90 : 1 zoom lens	2.7 - 15.4 m (8.9 - 50.5 ft)
2.90 - 4.34 : 1 zoom lens	3.6 - 22.5 m (11.8 - 73.8 ft)
4.34 - 6.76 : 1 zoom lens	5.5 - 35 m (18 - 114.8 ft)

3. Ensure the required throw distance is within the range of the matching lens.

Notes

TRC can only be applied if greater than 1. If TRC is 1 or less, disregard it and calculate the throw ratio using the basic formula.

Do not use the short lens hood with the long throw lens.

For further information about using the right lens and hood, see ***The lens hood*** *in the* ***Installation and Quick-Start Guide****.*

Full lens calculation example

Your screen is ***4.5 m*** wide; you wish to place the projector approximately ***11 m*** from the screen. The source is ***4:3***.

1. Calculate TRC as follows:

$$TRC = \frac{1.6}{1.33} = 1.2$$

2. Calculate the throw ratio:

$$Throw\ ratio = \frac{11}{4.5 \times 1.2} = 2.04$$

3. Find a match in the lens table.

   The table shows that the matching lens is ***the 1.74 - 2.17 : 1 zoom lens***.

4. Check whether the lens covers the required throw distance.

   The range quoted for the 1.74 - 2.17 : 1 zoom lens is ***2.2 - 11.8 m***. The required distance of 11 m is within the range.

INFORMATION YOU NEED FOR THESE CALCULATIONS

- The TRC formula $TRC = \frac{DMD™\ aspect\ ratio}{Source\ aspect\ ratio}$

- The TRC table (to use instead of the formula)

2.35:1 (Scope)	TRC not used
1.85:1 (Flat)	TRC not used
1.78:1 (16:9)	TRC not used
1.66:1 (Vista)	TRC not used
1.6:1 (16:10)	TRC not used (native resolution)
1.33:1 (4:3)	TRC = 1.2
1.25:1 (5:4)	TRC = 1.28

- The throw ratio formula $Throw\ ratio = \frac{Throw\ distance}{Screen\ width \times TRC}$

- The lens table:

Throw ratios	Throw distance range
0.77 : 1 fixed lens	1.3 - 2.5 m (4.3 - 8.2 ft)
1.16 : 1 fixed lens	1.4 - 6.2 m (4.6 - 20.3 ft)
1.45 - 1.74 : 1 zoom lens	1.8 - 9.3 m (5.9 - 30.5 ft)
1.74 - 2.17 : 1 zoom lens	2.2 - 11.8 m (7.2 - 38.7 ft)
2.17 - 2.90 : 1 zoom lens	2.7 - 15.4 m (8.9 - 50.5 ft)
2.90 - 4.34 : 1 zoom lens	3.6 - 22.5 m (11.8 - 73.8 ft)
4.34 - 6.76 : 1 zoom lens	5.5 - 35 m (18 - 114.8 ft)

Notes

Screen Requirements

Fitting the image to the DMD™

If the source image supplied to the projector is smaller than the DMD™ resolution, the image will not fill the DMD™. The following examples show how a number of common formats may be displayed, depending on your DMD™ resolution.

WUXGA images displayed full width

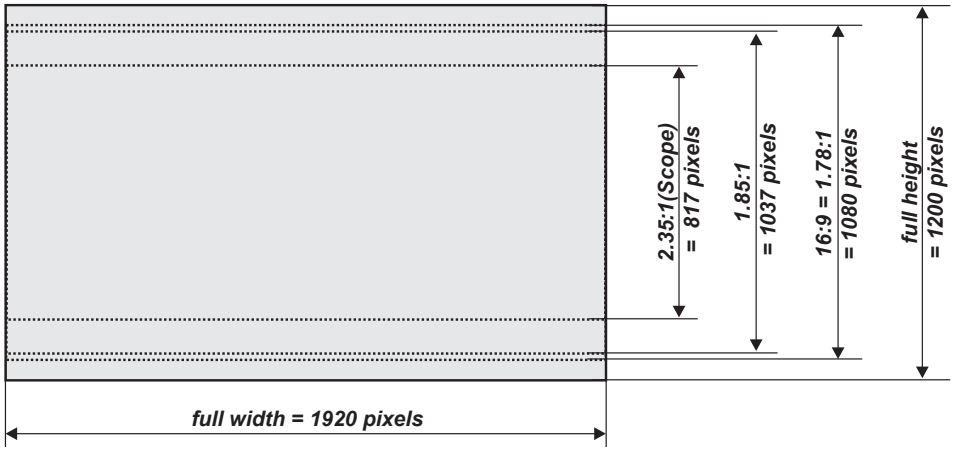

Notes

WUXGA images displayed with a height of 1080 pixels

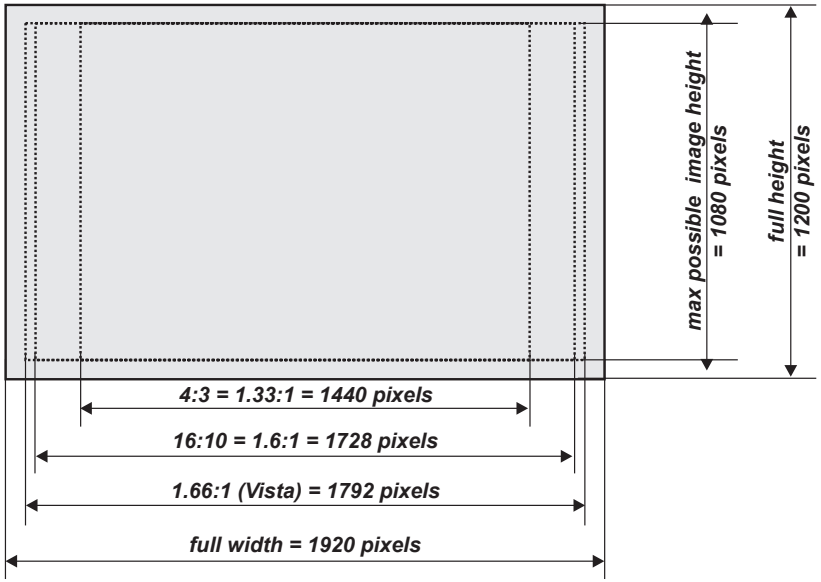

Notes

WUXGA images displayed full height

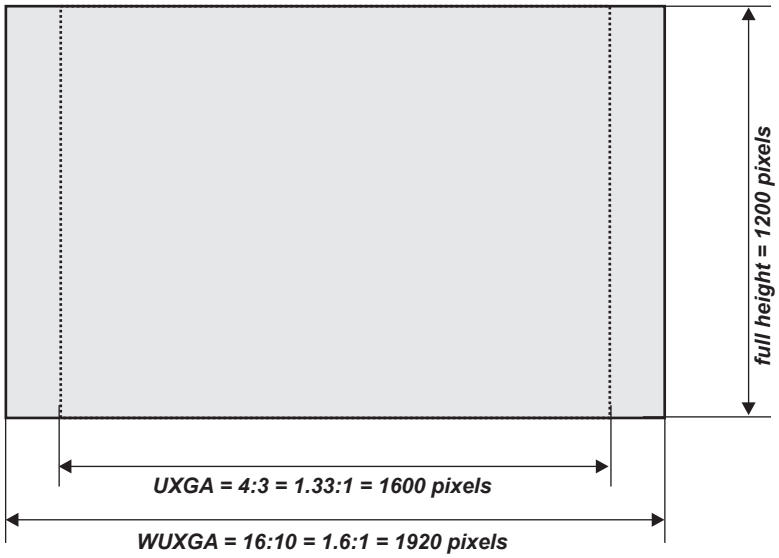

Notes

Only WUXGA or UXGA images can fill the full height of the DMD™, using all 1200 pixels without scaling.

Diagonal screen sizes

Screen sizes are sometimes specified by their diagonal size (D). When dealing with large screens and projection distances at different aspect ratios, it is more convenient to measure screen width (W) and height (H).

The example calculations below show how to convert diagonal sizes into width and height, at various aspect ratios.

2.35:1 (Scope)
W = D x 0.92 ***H*** = D x 0.39

1.85:1
W = D x 0.88 ***H*** = D x 0.47

16:9 = 1.78:1
W = D x 0.87 ***H*** = D x 0.49

1.66:1 (Vista)
W = D x 0.86 ***H*** = D x 0.52

16:10 = 1.6:1 (native aspect ratio for WUXGA projectors)
W = D x 0.85 ***H*** = D x 0.53

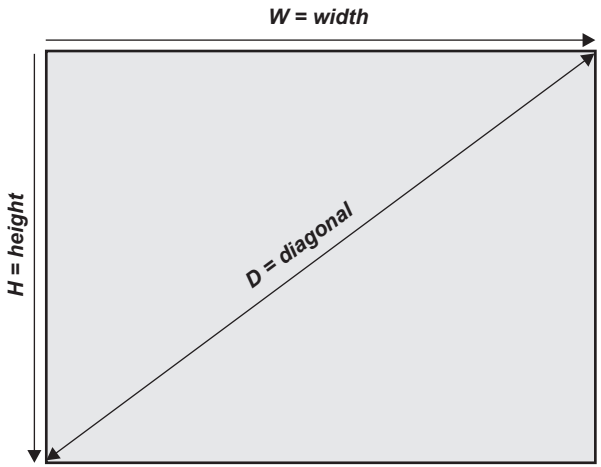

Notes

Fitting the image to the screen

It is important that your screen is of sufficient height and width to display images at all the aspect ratios you are planning to use.

Use the conversion chart to check that you are able to display the full image on your screen. If you have insufficient height or width, you will have to reduce the overall image size in order to display the full image on your screen.

1. **4:3 = 1.33:1**
   W = H x 1.33, H = W x 0.75
2. **16:10 = 1.6:1**
   (native aspect ratio for WUXGA projectors)
   W = H x 1.6, H = W x 0.625
3. **1.66:1 (Vista)**
   W = H x 1.66, H = W x 0.6
4. **16:9 = 1.78:1**
   W = H x 1.78, H = W x 0.56
5. **1.85:1 (Flat)**
   W = H x 1.85, H = W x 0.54
6. **2.35:1 (Scope)**
   W = H x 2.35, H = W x 0.426

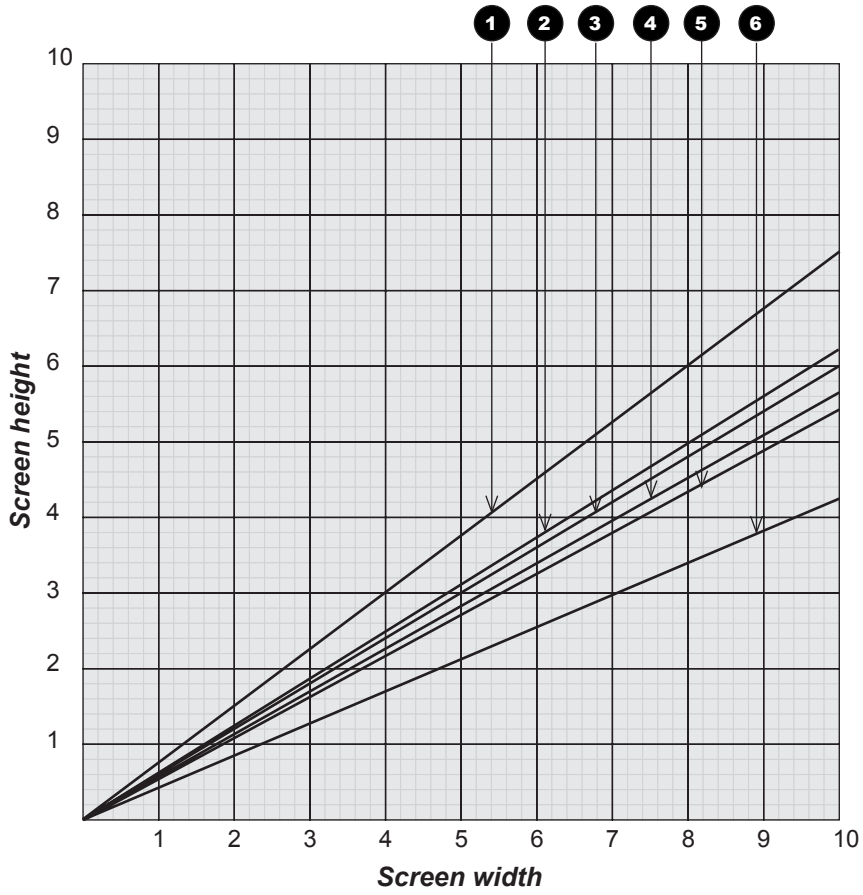

Notes

Positioning the screen and projector

For optimum viewing, the screen should be a flat surface perpendicular to the floor. The bottom of the screen should be 1.2 m (4 feet) above the floor and the front row of the audience should not have to look up more than 30° to see the top of the screen.

The distance between the front row of the audience and the screen should be at least twice the screen height and the distance between the back row and the screen should be a maximum of 8 times the screen height. The screen viewing area should be within a 60° range from the face of the screen.

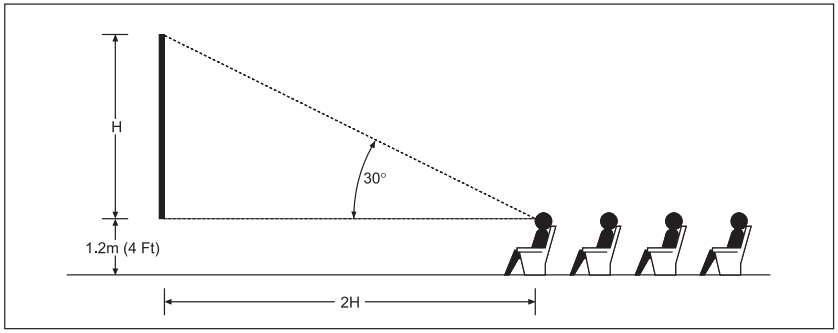

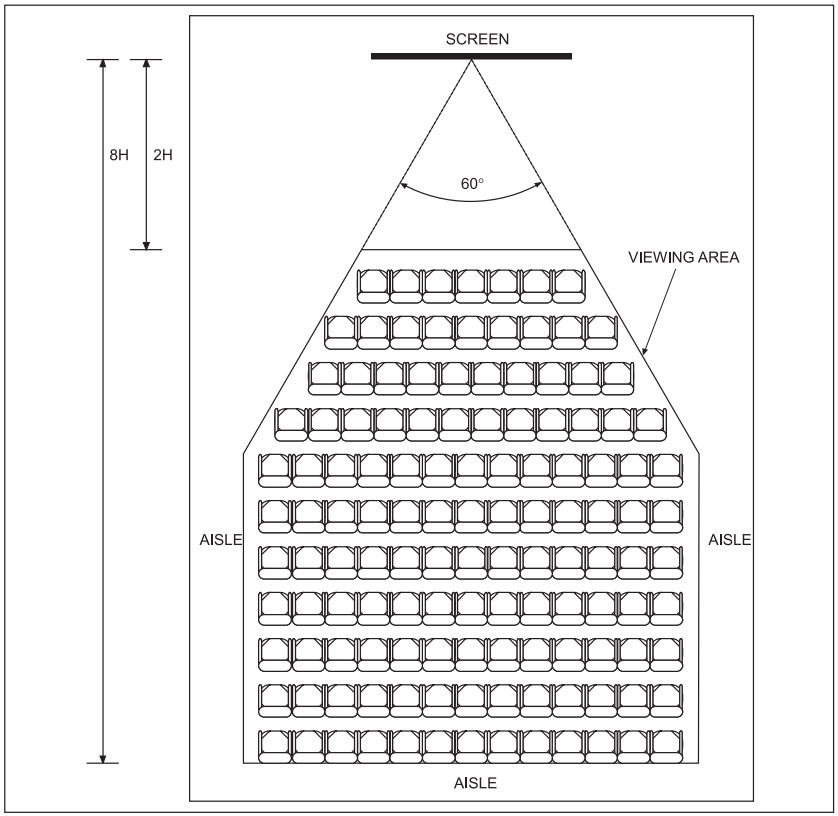

Notes

The projector should be installed as close to the power outlet as possible.

The power connection should be easily accessible, so that it can be disconnected in an emergency.

Ensure that there is at least 30 cm (12 in) of space between the ventilation outlets and any wall, and 10 cm (4 in) on all other sides.

Do not install the projector close to anything that might be affected by its operational heat, for instance, polystyrene ceiling tiles, curtains etc.

The image can be flipped for rear projection (see ***Setup menu*** *in the* ***Operating Guide****) and displayed without the need for extra mirrors or equipment.*

However, you must ensure that there is sufficient distance behind the screen for the projector to be correctly located.

Rear installation is generally more complicated and advice should be sought from your local dealer before attempting it.

Positioning The Image

The normal position for the projector is at the centre of the screen. However, you can set the projector above or below the centre, or to one side, and adjust the image using the **Lens shift** feature (known as ***rising and falling front***) to maintain a geometrically correct image.

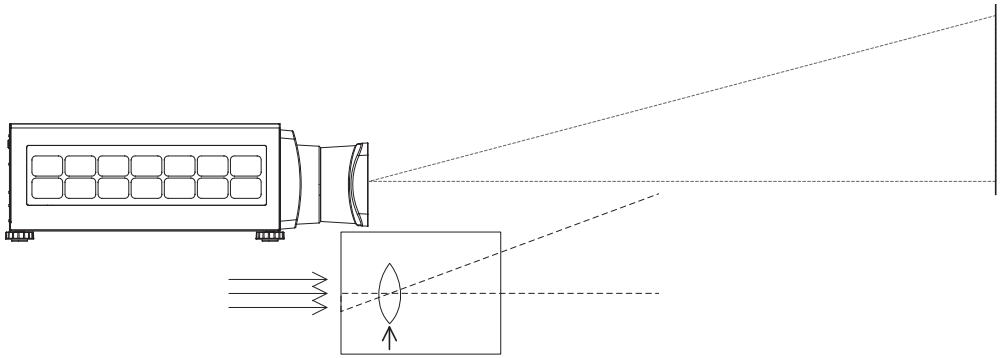

Shifting the lens up (rising front)

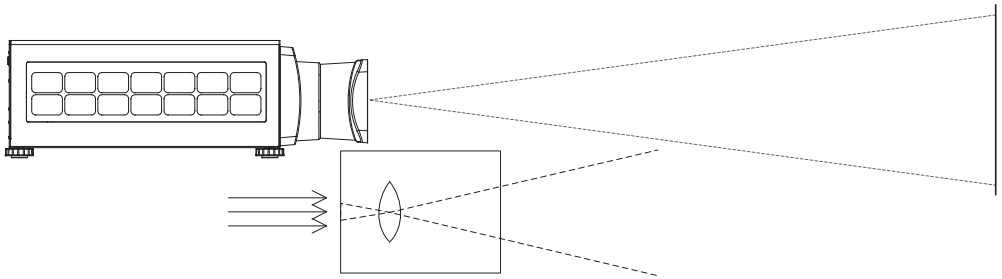

Centered lens

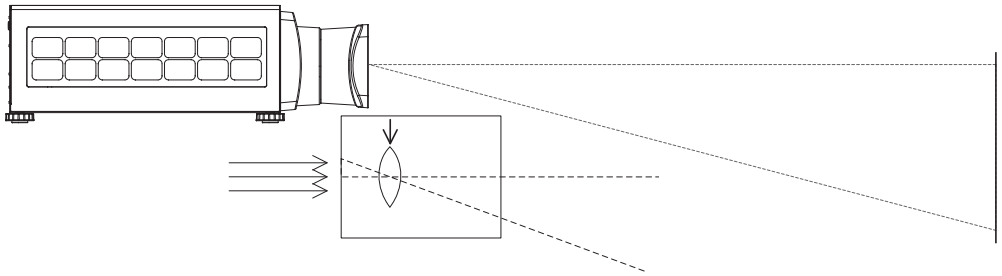

Shifting the lens down (falling front)

Notes

For more information on shifting the lens, see ***Lens control*** *in the* ***Operating Guide****.*

Whenever possible, position the projector so that the lens is centered for the highest quality image.

Any single adjustment outside the ranges specified on the following page may result in an unacceptable level of distortion, particularly at the corners of the image, due to the image passing through the periphery of the lens optics.

If the lens is to be shifted in two directions combined, the maximum range without distortion will be somewhat less, as can be seen in the illustrations below.

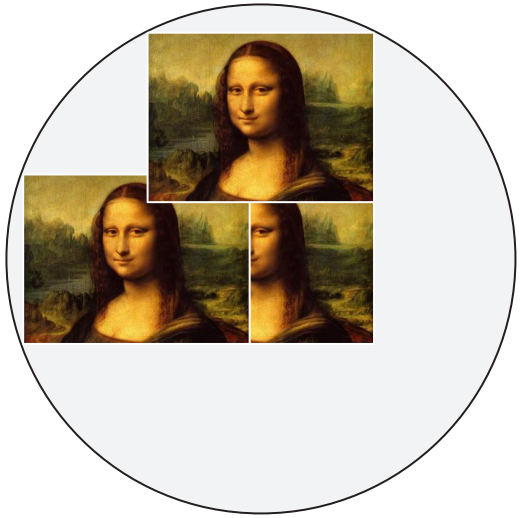

Full horizontal or vertical shift

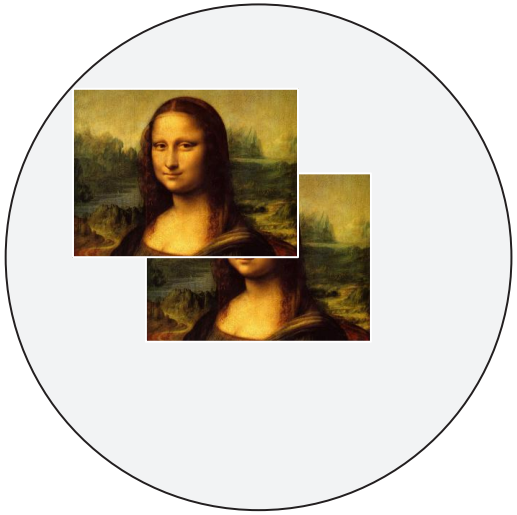

Combined shift is reduced

Notes

For more information on shifting the lens, see ***Lens control*** *in the* ***Operating Guide****.*

Maximum offset range

The maximum offset range available with no distortion or vignetting is dependent on which lens is used. Shifting the lens beyond its undistorted limits may be physically possible, however you may experience some vignetting or distortion.

	vertical (pixels)	horizontal (pixels)	vertical (frame)	horizontal (frame)
0.77 : 1 and 1.16:1 fixed lens	±240	±96	±0.2	±0.05
all zoom lens	±720	±288	±0.6	±0.15

Notes

For more information on shifting the lens, see ***Lens control*** *in the* ***Operating Guide***

Aspect Ratios Explained

The appearance of a projected image on the screen depends on a combination of the following:

- The DMD™ resolution is **WUXGA** with a 1920 x 1200 resolution, corresponding to an aspect ratio of 16:10
- The aspect ratio of the input signal: usually **4:3**, **16:9** or **16:10**
- The value of the **Aspect Ratio** setting of the projector:
  - **16:9**, **4:3**, **16:10** and **5:4** stretch the image to the selected aspect ratio. **16:9** leaves black bars at the top and bottom of the screen (letterboxing effect); **4:3** and **5:4** leave black bars at the sides of the screen (pillarboxing).
  - **TheaterScope** is a special setting used in combination with an anamorphic lens, an optional accessory. It removes letterboxing from a 2.35:1 source packed into a 16:9 frame.
  - **4:3 Narrow** is a special setting used in combination with an anamorphic lens, an optional accessory. It squeezes 4:3 content so that the intended aspect ratio is displayed on screen when projected through an anamorphic lens.
  - **Source** shows the image with its original aspect ratio, not using the whole screen if the DMD™ aspect ratio does not match. The image is scaled to fit either the full width or height of the screen.

Notes

Aspect ratio examples

Source: 4:3

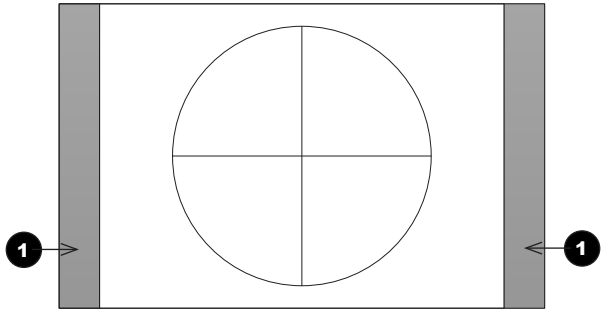

Aspect Ratio: Source / 4:3

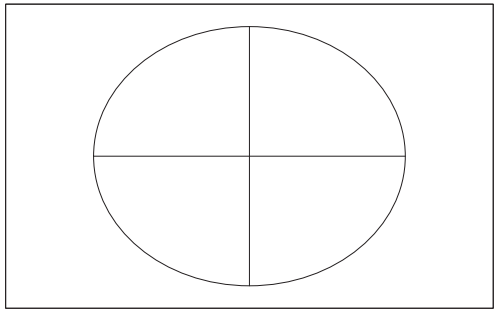

Aspect Ratio: 16:10

Source: 16:9

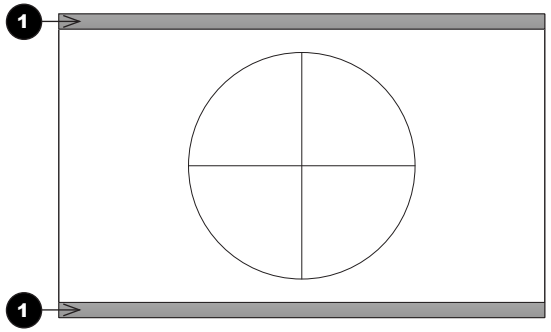

Aspect Ratio: Source / 16:9

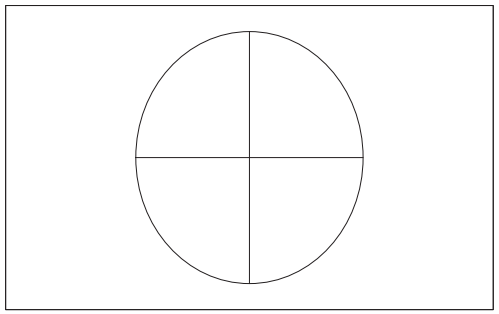

Aspect Ratio: 16:10

Source: 16:10 (native)

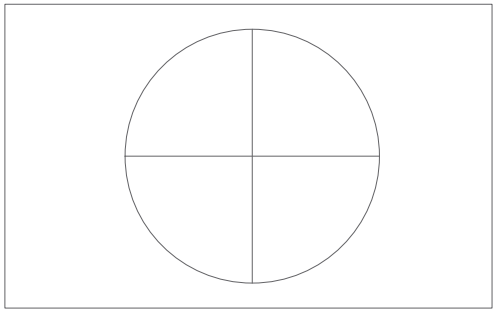

Aspect Ratio: Source / 16:10

1 **Unused screen areas**

Notes

Aspect ratio example: TheaterScope

The **TheaterScope** setting is used in combination with an anamorphic lens to restore 2.35:1 images packed into a 16:9 frame. Such images are projected with black lines at the top and bottom of the 16:9 screen to make up for the difference in aspect ratios.

Without an anamorphic lens and without the TheaterScope setting applied, a 16:9 source containing a 2.35:1 image looks like this:

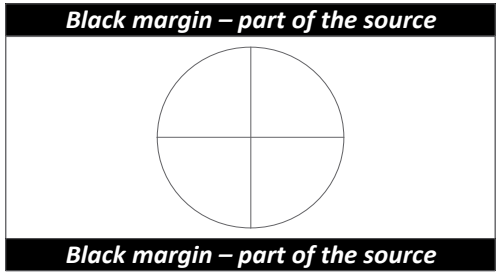

If we change the setting to **TheaterScope**, the black lines will disappear but the image will stretch vertically to reach the top and bottom of the DMD™:

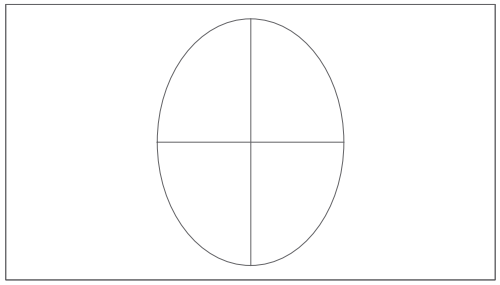

An anamorphic lens will stretch the image horizontally, restoring the original 2.35 ratio:

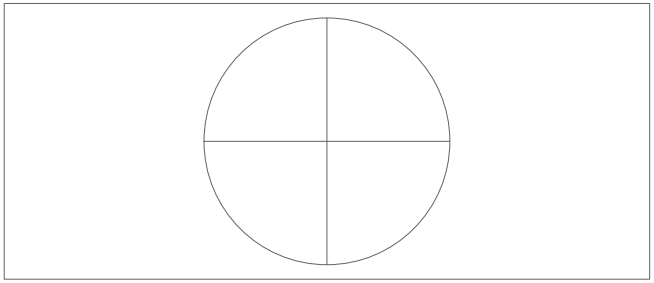

Notes

Frame Rates And Pulldowns Explained

Notes

Interlaced and progressive scan

A ***progressive scan*** is a method of updating the image by drawing all the lines of each frame in a sequence. In contrast, ***interlaced video*** alternately scans odd and even lines. In old analog TV interlacing was commonly used as a way of doubling the refresh rate without consuming extra bandwidth.

The following artifacts are common with interlaced video:

- edge tear (combing)

  The image lands between two fields and blurs. This is commonly observed when viewing rapid lateral movement.

- aliasing (stair-stepping)

  The texture of the image becomes populated with unrealistic patterns. Aliasing occurs because of differences between the original frame rate and the destination format.

- twitter

  The image shimmers, for example when showing rolling credits. This happens when the image contains thin horizontal lines that only appear in one field.

Frame rates of image sources

Original analog films are made at 24 fps and the whole frame is projected at once. To eliminate flicker and create an impression of continuous movement, the projector blades divide the images so that the viewer sees 48 frames per second.

Interlaced video scans odd lines, then even. Two fields are blended into one image. NTSC video (60i) is 29.97 fps, or 59.94 fields per second.

24p video is progressive but without the benefit of projector blades dividing the images, so it looks jumpier on playback than film. 24p is the optimal format for projects that are finished on film.

30p is optimal for projects finished on video. It has fewer strobing issues than 24p in video playback.

Pulldowns - conversion into destination formats

Pulldowns are a method of converting a 24p source into a different destination format by adding extra frames to the source.

2:3 (normal) pulldown

This method is used to convert a 24p source (film) into a 60i destination (NTSC video) by adding two extra fields for every four frames, effectively increasing the frame rate to 30 fps. The frame is split into fields and then two fields are repeated for every four original frames as shown in the illustration below.

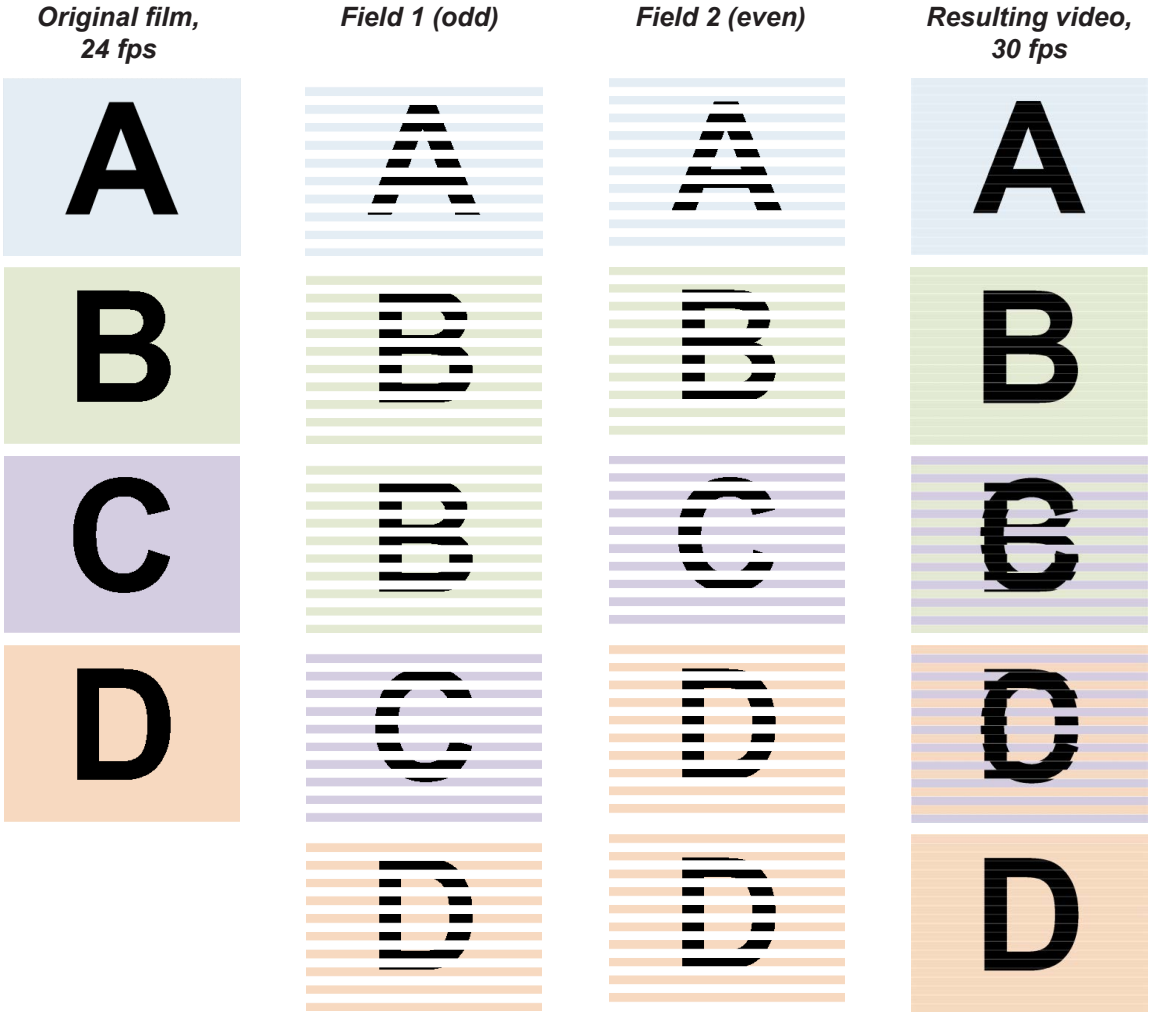

Notes

2:3:3:2 (advanced) pulldown

This method is very similar to the normal pulldown. Unlike the normal pulldown method, the resulting 30 fps video sequence contains only one frame containing fields from two different source frames.

The advantage of this method is that it is easier to reverse, if necessary.

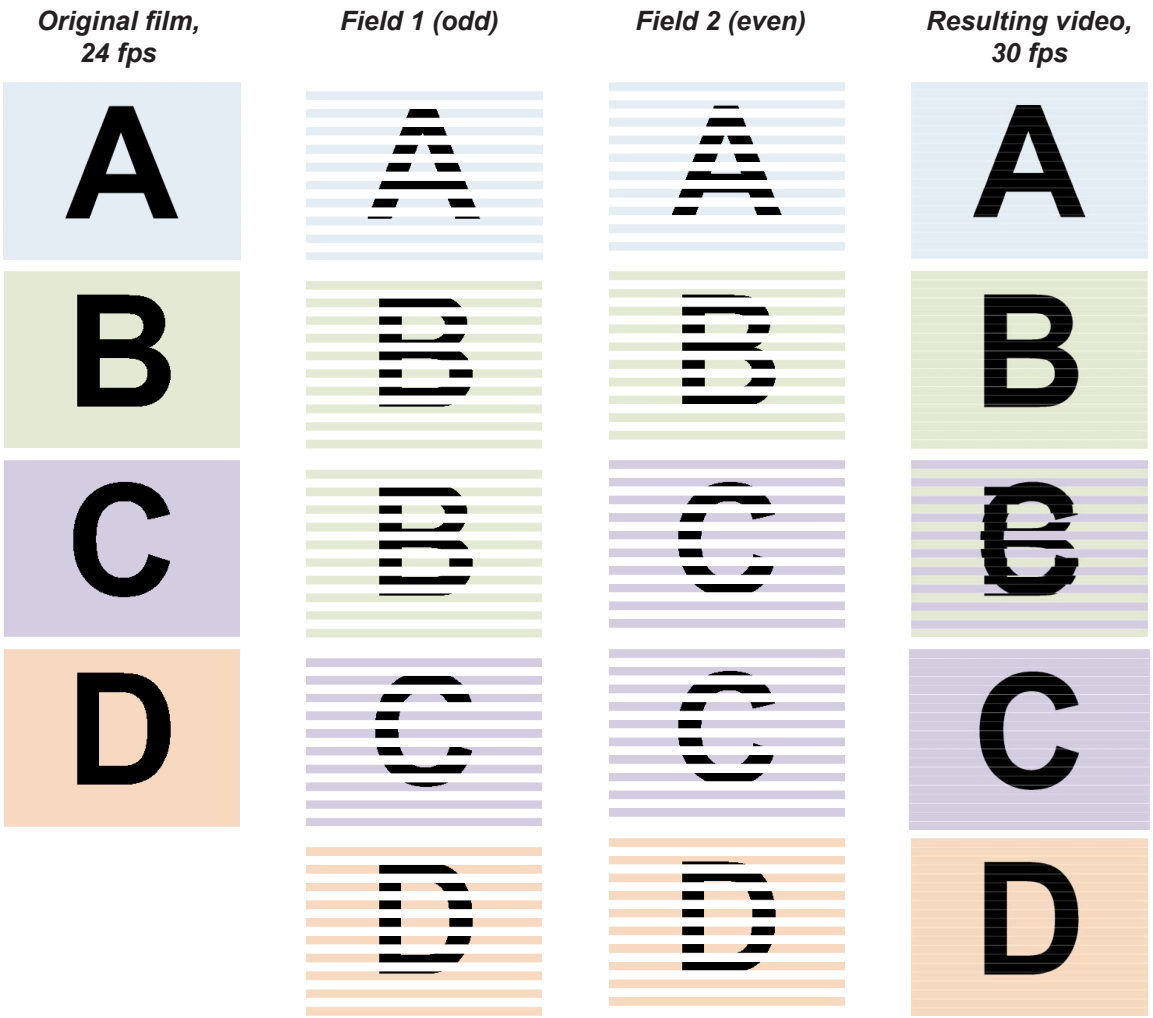

Notes

The projector will use advanced pulldown on suitable video material, wherever possible.

Appendix A: Lens Part Numbers

Throw ratios	Part number	Throw distance range
0.77 : 1 fixed lens	110-808	1.3 - 2.5 m (4.3 - 8.2 ft)
1.16 : 1 fixed lens	110-809	1.4 - 6.2 m (4.6 - 20.3 ft)
1.45 - 1.74 : 1 zoom lens	110-803	1.8 - 9.3 m (5.9 - 30.5 ft)
1.74 - 2.17 : 1 zoom lens	112-878	2.2 - 11.8 m (7.2 - 38.7 ft)
2.17 - 2.90 : 1 zoom lens	113-852	2.7 - 15.4 m (8.9 - 50.5 ft)
2.90 - 4.34 : 1 zoom lens	110-806	3.6 - 22.5 m (11.8 - 73.8 ft)
4.34 - 6.76 : 1 zoom lens	110-807	5.5 - 35 m (18 - 114.8 ft)

Notes

The throw ratios given here apply only when the image fills the width of the DMD™.

For images that do not fill the width of the DMD™, the throw ratio needs to be recalculated using a throw ratio correction (TRC).

For further information, see ***Choosing A Lens*** *and* ***Appendix B: Lens Charts*** *in this guide.*

Throw distance calculations are based on the distance from the outer end of the lens, which will vary from lens to lens.

Do not use the short lens hood with the long throw lens.

For further information about using the right lens and hood, see ***The lens hood*** *in the* ***Installation and Quick-Start Guide****.*

Appendix B: Lens Charts

How to use the lens charts

The lens charts on the following pages provide a quick guide to the type of lens needed for a particular projector.

To use the lens charts, you need the following information:

- The distance between the projector and the screen (throw distance)
- The maximum width of your screen

In the chart, find the point where the throw distance corresponds to the screen width, as shown in the example below.

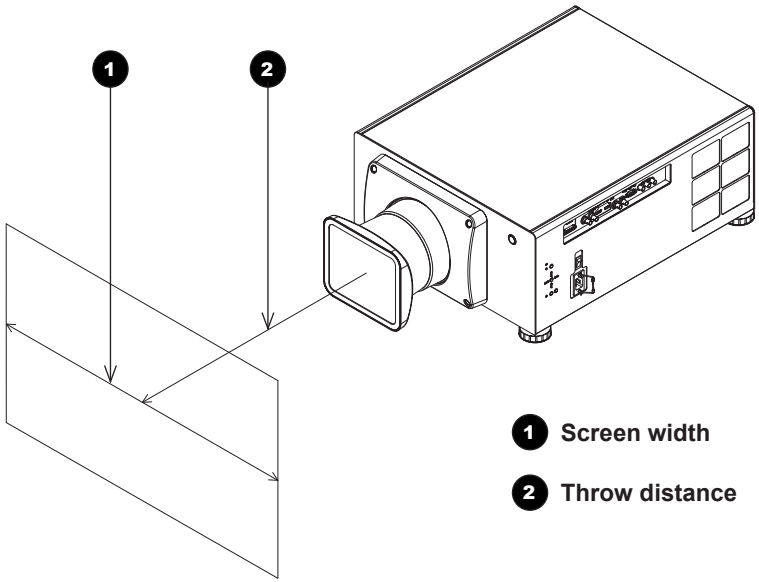

Example

For a projector with

- throw distance 11 m, and
- screen width 4.5 m,

the correct lens would be ***number*** **5** in the chart.

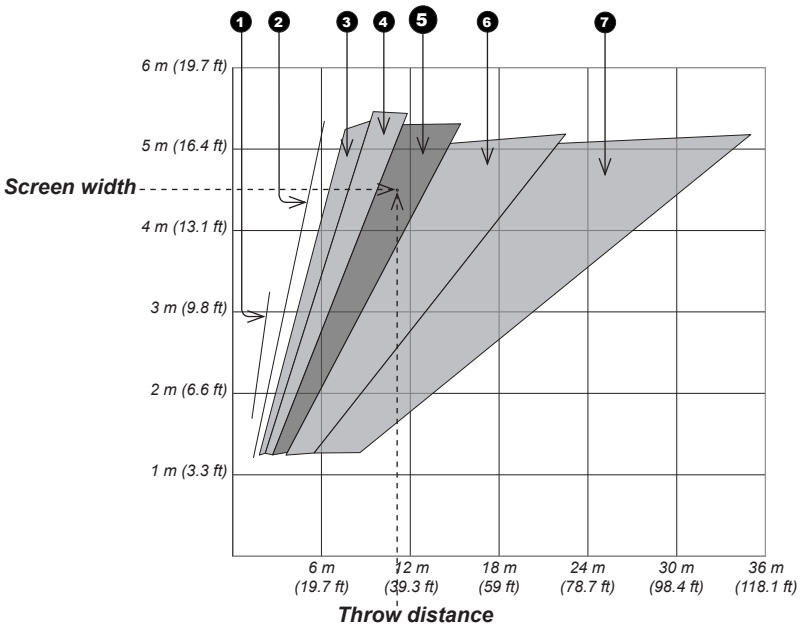

Notes

For information about individual lens part numbers, see ***Appendix A*** *earlier in this document.*

Do not use the short lens hood with the long throw lens.

For further information about using the right lens and hood, see ***The lens hood*** *in the* ***Installation and Quick-Start Guide****.*

TRC values applied in the charts

Full width images

Formats that fit the width of the DMD™ without applying a throw ratio correction (TRC) include:

- **2.35:1 (Scope)** 1920 x 817 pixels TRC = 1
- **1.85:1 (Flat)** 1920 x 1037 pixels TRC = 1
- **1.78:1 (16:9)** 1920 x 1080 pixels TRC = 1
- **1.66:1 (Vista)** 1920 x 1156 pixels TRC = 1
- **1.6:1 (16:10)** 1920 x 1200 pixels (native resolution) TRC = 1

Full height images

A throw ratio correction (TRC) has been applied to the following charts:

- **1.25:1 (5:4)** 1500 x 1200 pixels TRC = 1.28
- **1.33:1 (4:3)** 1600 x 1200 pixels TRC = 1.2

Notes

For information about individual lens part numbers, see ***Appendix A*** *earlier in this document.*

Full DMD™ width images

Full width images are 2.35:1 (Scope), 1.85:1 (Flat) 1.78:1 (16:9), 1.66:1 (Vista) and 1.6:1 (native).

1. **0.77 : 1 fixed lens**
2. **1.16 : 1 fixed lens**
3. **1.45 - 1.74 : 1 zoom lens**
4. **1.74 - 2.17 : 1 zoom lens**
5. **2.17 - 2.90 : 1 zoom lens**
6. **2.90 - 4.34 : 1 zoom lens**
7. **4.34 - 6.76 : 1 zoom lens**

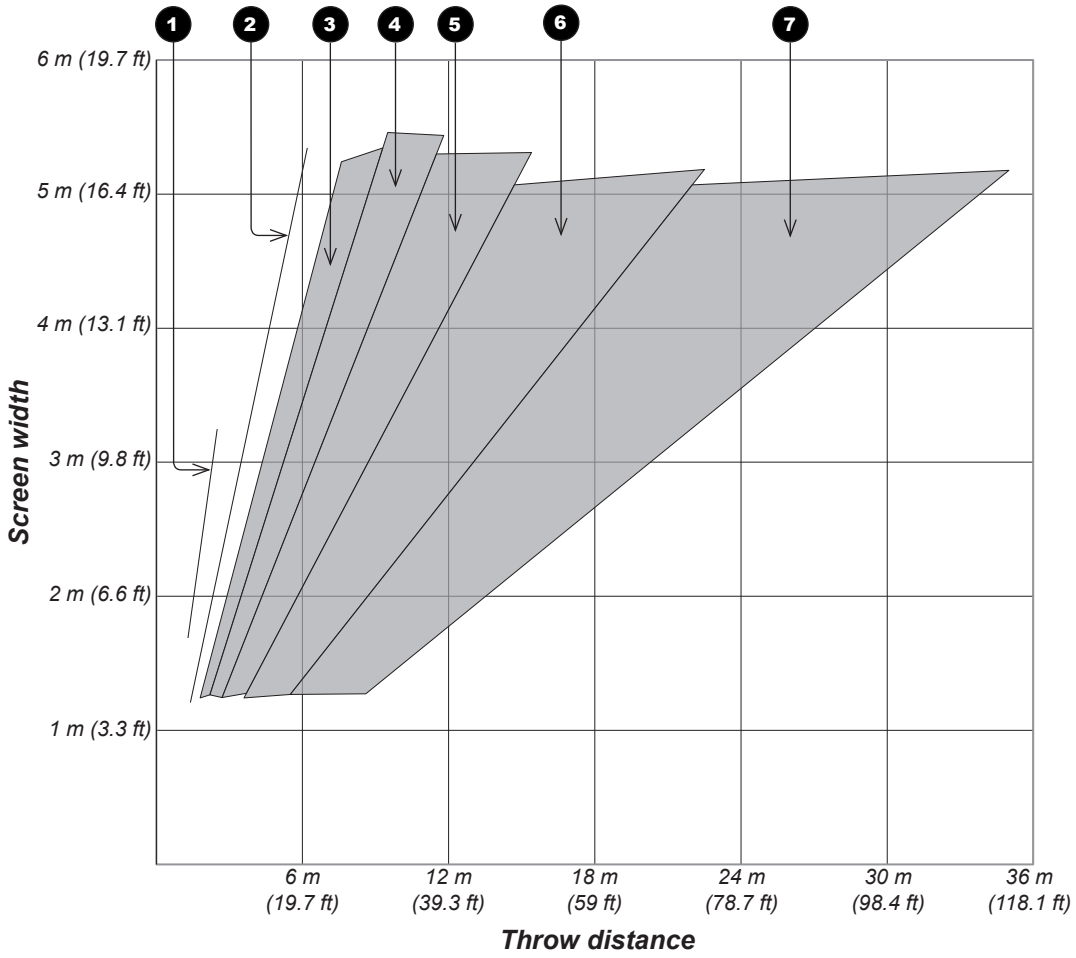

Notes

This chart has a TRC of 1.0, for use with the following images:

For WUXGA:

2.35:1 (Scope), 1.85:1 (Flat), 1.78:1 (16:9), 1.66:1 (Vista) and 1.6:1 (native)

For information about individual lens part numbers, see ***Appendix A*** *earlier in this document.*

Do not use the short lens hood with the long throw lens.

For further information about using the right lens and hood, see ***The lens hood*** *in the* ***Installation and Quick-Start Guide****.*

1.25:1 images

1. **0.77 : 1 fixed lens**
2. **1.16 : 1 fixed lens**
3. **1.45 - 1.74 : 1 zoom lens**
4. **1.74 - 2.17 : 1 zoom lens**
5. **2.17 - 2.90 : 1 zoom lens**
6. **2.90 - 4.34 : 1 zoom lens**
7. **4.34 - 6.76 : 1 zoom lens**

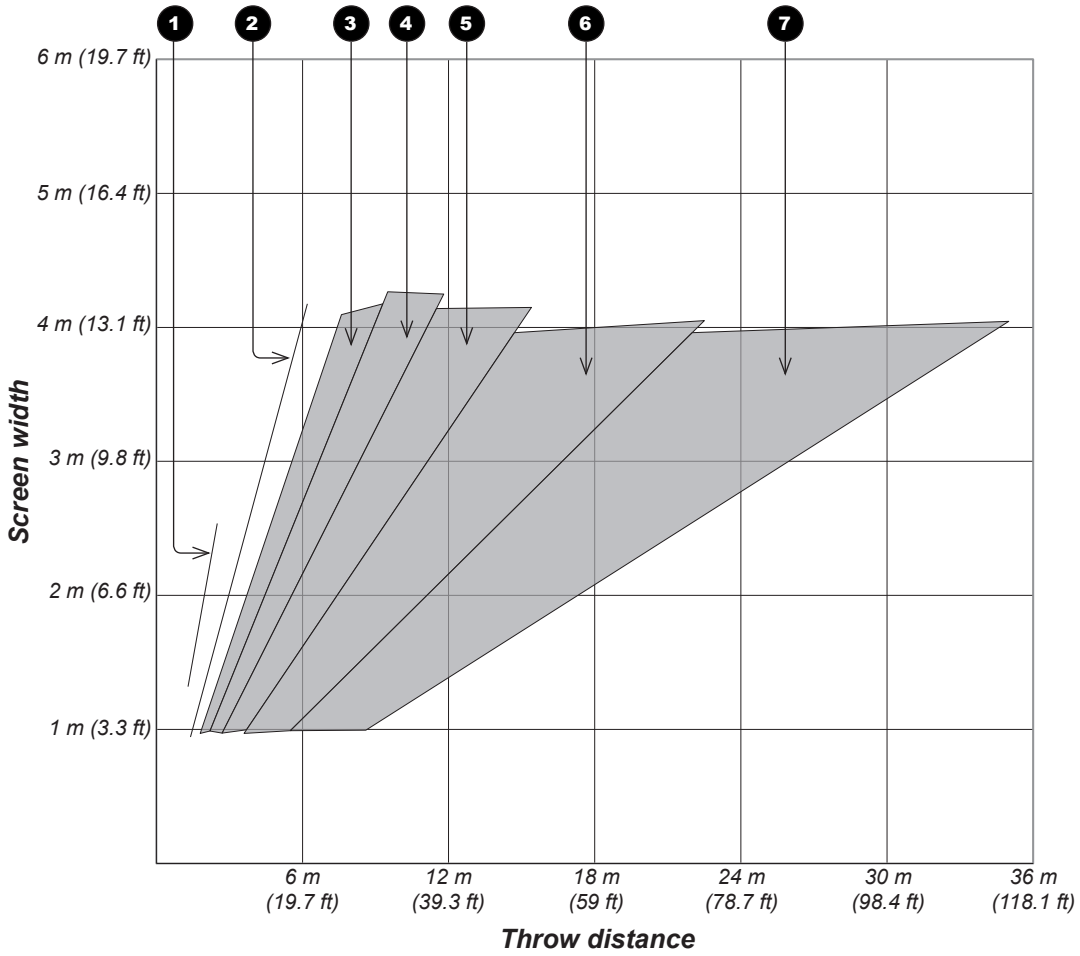

Notes

This chart has a TRC of 1.28, for use with the following images:

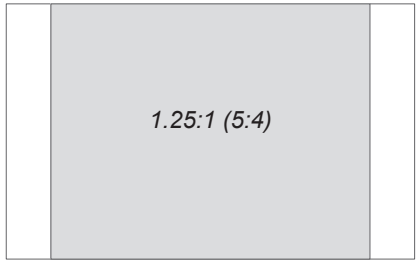

For information about individual lens part numbers, see ***Appendix A*** *earlier in this document.*

Do not use the short lens hood with the long throw lens.

For further information about using the right lens and hood, see ***The lens hood*** *in the* ***Installation and Quick-Start Guide****.*

1.33:1 images

1. **0.77 : 1 fixed lens**
2. **1.16 : 1 fixed lens**
3. **1.45 - 1.74 : 1 zoom lens**
4. **1.74 - 2.17 : 1 zoom lens**
5. **2.17 - 2.90 : 1 zoom lens**
6. **2.90 - 4.34 : 1 zoom lens**
7. **4.34 - 6.76 : 1 zoom lens**

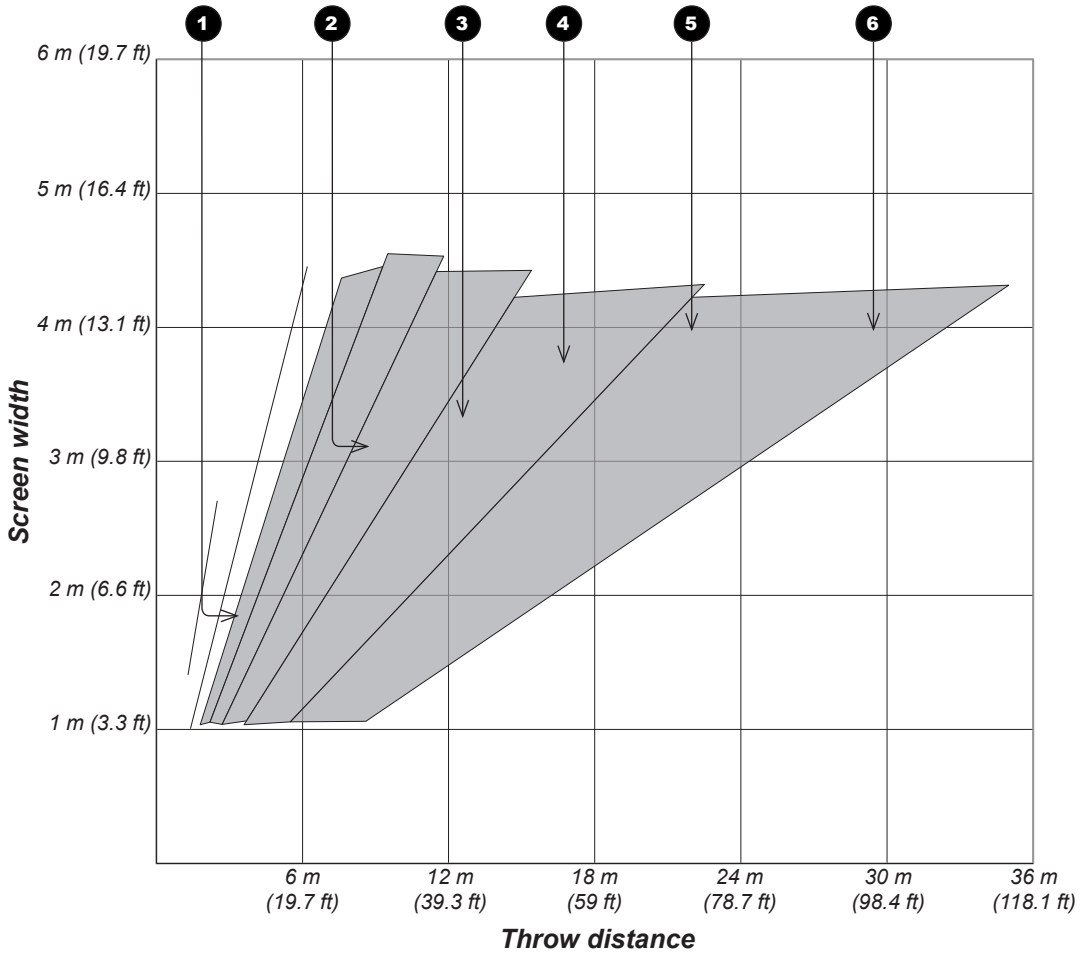

Notes

This chart has a TRC of 1.2, for use with the following images:

For information about individual lens part numbers, see ***Appendix A*** *earlier in this document.*

Do not use the short lens hood with the long throw lens.

For further information about using the right lens and hood, see ***The lens hood*** *in the* ***Installation and Quick-Start Guide****.*

Appendix C: Supported Signal Input Modes

2D input modes

Standard		Resolution	Vertical Frequency (Hz)	Total number of lines	Horizontal Frequency (kHz)	Component 1 & 2	VGA	HDMI 1 & 2 / HDBaseT	DVI (DVI-D)	3GSDI
SDTV	480i	720 x 480	59.94	525	15.73	✓				✓
	576i	720 x 576	50.00	625	15.63	✓				✓
EDTV	480p59	720 x 480	59.94	525	31.47	✓		✓		✓
	480p60	720 x 480	60.00	525	31.50	✓		✓		✓
	576p50	720 x 576	50.00	625	31.25	✓		✓		✓
HDTV	720p50	1280 x 720	50.00	750	37.50	✓		✓	✓	✓
	720p59	1280 x 720	59.94	750	44.96	✓		✓		✓
	720p60	1280 x 720	60.00	750	45.00	✓		✓		✓
	1080p23	1920 x 1080	23.98	1125	26.97	✓		✓		✓
	1080p24	1920 x 1080	24.00	1125	27.00	✓		✓		✓
	1080p25	1920 x 1080	25.00	1125	28.13	✓		✓		✓
	1080p29	1920 x 1080	29.97	1125	33.72	✓		✓		✓
	1080p30	1920 x 1080	30.00	1125	33.75	✓		✓		✓
	1080i50	1920 x 1080	50.00	1125	28.13	✓		✓		✓
	1080p50	1920 x 1080	50.00	1125	56.25	✓		✓	✓	✓
	1080i59	1920 x 1080	59.94	1125	33.72	✓		✓		✓
	1080p59	1920 x 1080	59.94	1125	67.43	✓		✓	✓	✓
	1080i60	1920 x 1080	60.00	1125	33.75	✓		✓		✓
	1080p60	1920 x 1080	60.00	1125	67.50	✓		✓	✓	
COMPUTER	VGA59	640 x 480	59.94	525	31.47		✓	✓	✓	
	VGA60	640 x 480	60.00	525	31.50		✓	✓	✓	
	MACI	640 x 480	66.67	525	35.00		✓	✓		
	VGA75	640 x 480	75.00	500	37.50		✓	✓	✓	

Notes

Standard		Resolution	Vertical Frequency (Hz)	Total number of lines	Horizontal Frequency (kHz)	Component 1 & 2	VGA	HDMI 1 & 2 / HDBaseT	DVI (DVI-D)	3GSDI
COMPUTER (continued)	SVGA60	800 x 600	60.32	628	37.88		✓	✓	✓	
	SVGA75	800 x 600	75.00	625	46.88		✓	✓	✓	
	SVGA85	800 x 600	85.06	631	53.67		✓	✓	✓	
	MACII	832 x 624	75.08	1120	49.10		✓	✓		
	XGA60	1024 x 768	60.00	806	48.36		✓	✓		
	XGA70	1024 x 768	70.07	806	56.48		✓	✓		
	XGA75	1024 x 768	75.03	800	60.02		✓	✓		
	WXGA50	1280 x 720	49.83	744	37.07		✓	✓		
	WXGA60	1280 x 768	59.87	798	47.78		✓	✓		
	WXGA75	1280 x 768	74.89	805	60.29		✓	✓		
	WXGA85	1280 x 768	84.84	809	68.63		✓	✓		
	WXGA50	1280 x 800	50.00	826	41.26		✓	✓	✓	
	WXGA60	1280 x 800	59.81	831	49.70		✓	✓	✓	
	WXGA75	1280 x 800	74.93	838	62.80		✓	✓	✓	
	SXGA60	1280 x 1024	60.02	1066	63.98		✓	✓	✓	
	SXGA75	1280 x 1024	75.02	1066	79.98		✓	✓	✓	
	SXGA85	1280 x 1024	85.02	1072	91.15		✓	✓	✓	
	SXGA+60	1400 x 1050	59.98	1089	65.32		✓	✓	✓	
	SXGA+75	1400 x 1050	74.87	1089	82.28		✓	✓	✓	
	UXGA60	1600 x 1200	60.00	1250	75.00		✓	✓	✓	
	WSXGA+60	1680 x 1050	59.95	1089	65.29		✓	✓	✓	
	FHD50	1920 x 1080	49.92	1114	55.62		✓	✓		
	WUXGA60	1920 x 1200	59.95	1235	74.04		✓	✓	✓	

Notes

3D input modes

Standard	Resolution	Vertical Frequency (Hz)	Total number of lines	Horizontal Frequency (kHz)	HDMI 1 / HDMI 2 / HDBaseT	Dual Pipe	DVI (DVI-D)
SXGA60 Dual Pipe	1280 x 1024	60.02	1066	63.98		✓	
SXGA+60 Dual Pipe	1400 x 1050	59.98	1089	65.32		✓	
WUXGA60 Dual Pipe	1920 x 1200	59.95	1235	74.04		✓	
720p50 Frame Packing	1280 x 720	50.00	1470	37.50	✓		
720p50 Side-by-Side (Half)	1280 x 720	50.00	1470	37.50	✓		
720p50 Top-and-Bottom	1280 x 720	50.00	750	37.50	✓		
720p50 Dual Pipe	1280 x 720	50.00	750	37.50		✓	
1080i50 Side-by-Side (Half)	1920 x 1080	50.00	1125	56.25	✓		
1080p24 Frame Packing	1920 x 1080	24.00	2205	27.00	✓		
1080p24 Side-by-Side (Half)	1920 x 1080	24.00	2205	27.00	✓		
1080p24 Top-and-Bottom	1920 x 1080	24.00	2205	27.00	✓		
1080p24 Dual Pipe	1920 x 1080	24.00	2205	27.00		✓	
1080p30 Frame Packing	1920 x 1080	30.00	1125	33.75	✓		
1080p30 Side-by-Side (Half)	1920 x 1080	30.00	1125	33.75	✓		
1080p30 Top-and-Bottom	1920 x 1080	30.00	1125	33.75	✓		
1080p30 Dual Pipe	1920 x 1080	30.00	1125	33.75		✓	
1080p50 Side-by-Side (Half)	1920 x 1080	50.00	1125	56.25	✓		
1080p50 Top-and-Bottom	1920 x 1080	50.00	1125	56.25	✓		
1080p50 Dual Pipe	1920 x 1080	50.00	1125	56.25		✓	
1080p60 Side-by-Side (Half)	1920 x 1080	60.00	1125	67.50	✓		
1080p60 Top-and-Bottom	1920 x 1080	60.00	1125	67.50	✓		
1080p60 Dual Pipe	1920 x 1080	60.00	1125	67.50		✓	
1080p100 Frame Sequential	1920 x 1080	100.00	1133	113.22			✓
1080p120 Frame Sequential	1920 x 1080	120.00	1144	137.26			✓
WUXGA100 Frame Sequential	1920X1200	100.00	1258	125.72			✓
WUXGA120 Frame Sequential	1920X1200	120.00	1271	152.40			✓

Notes

Only the HDMI 1 & 2 and HDBaseT inputs support HDMI 1.4 3D formats.

Appendix D: Menu Map

Menu	Sub Menus
MAIN	
	Input *HDMI1, HDMI2, VGA, Comp1, Comp2, DVI, HDBaseT, SDI*
	Test Pattern *Off, White, Black, Red, Green, Blue, CheckerBoard, CrossHatch, V Burst, H Burst, Color Bar*
LENS	
	Lens Control
	Zoom / Focus mode
	Zoom *(uses input from the UP and DOWN arrows to zoom the image)*
	Focus *(uses input from the LEFT and RIGHT arrows to focus the image)*
	Lens Shift mode
	Lens Shift *(uses input from the arrows to shift the lens)*
	Lens Center *(command)*
IMAGE	
	Brightness *(slider, value range 0~ 200 [100])*
	Contrast *(slider, value range 0~ 200 [100])*
	Gamma *1.0, 1.8, 2.0, 2.2, 2.35, 2.5*
	Adaptive Contrast *Off, On*
	Saturation *(slider, value range 0~ 200 [100])*
	Hue *(slider, value range 0~ 200 [100])*
	Sharpness *(slider, value range 0~ 200 [100])*
	Noise Reduction *(slider, value range 0~ 200 [100])*
	Position and Phase
	V Position *(slider, value range 0~ 200 [100])*
	H Position *(slider, value range 0~ 200 [100])*
	Phase *(slider, value range 0~ 200 [100])*
	Tracking *(slider, value range 0~ 200 [100])*
	Sync Level *(slider, value range 0~ 200 [100])*
	Resync *(command)*

Notes

Some of the information in this menu map is summarised. See the actual menu on the projector for full details.

The underlined text represents the factory default value for each setting.

Menu	Sub Menus
COLOR	
	Color Space *Auto, YPbPr, YCbCr, RGB PC, RGB Video*
	Color Temperature *3200K, 5400K, 6500K, 7500K, 9300K, Native*
	Color Gamut *Auto, REC709, SMPTE-C, EBU, Native, User*
	User Gamut
	Measure Gamut
	Red x (slider, value range 0.550 ~ 0.750 [0.662])
	Red y (slider, value range 0.250 ~ 0.450 [0.334])
	Green x (slider, value range 0.200 ~ 0.400 [0.322])
	Green y (slider, value range 0.400 ~ 0.750 [0.656])
	Blue x (slider, value range 0.050 ~ 0.250 [0.138])
	Blue y (slider, value range 0.000 ~ 0.120 [0.042])
	White x (slider, value range 0.200 ~ 0.400 [0.291])
	White y (slider, value range 0.250 ~ 0.450 [0.334])
	Target RGBW Gamut
	Red x (slider, value range 0.550 ~ 0.750 [0.662])
	Red y (slider, value range 0.250 ~ 0.450 [0.334])
	Green x (slider, value range 0.200 ~ 0.400 [0.322])
	Green y (slider, value range 0.400 ~ 0.750 [0.656])
	Blue x (slider, value range 0.050 ~ 0.250 [0.138])
	Blue y (slider, value range 0.000 ~ 0.120 [0.042])
	White x (slider, value range 0.200 ~ 0.400 [0.291])
	White y (slider, value range 0.250 ~ 0.450 [0.334])
	Target MCY Gamut
	Magenta x (slider, value range 0.200 ~ 0.500 [0.000])
	Magenta y (slider, value range 0.050 ~ 0.250 [0.000])
	Cyan x (slider, value range 0.125 ~ 0.325 [0.000])
	Cyan y (slider, value range 0.225 ~ 0.425 [0.000])
	Yellow x (slider, value range 0.300 ~ 0.500 [0.000])
	Yellow y (slider, value range 0.400 ~ 0.600 [0.000])
	Reset (command)
	Red Lift *(slider, value range 0 ~ 200 [100])*
	Green Lift *(slider, value range 0 ~ 200 [100])*
	Blue Lift *(slider, value range 0 ~ 200 [100])*
	Red Gain *(slider, value range 0 ~ 200 [100])*
	Green Gain *(slider, value range 0 ~ 200 [100])*
	Blue Gain *(slider, value range 0 ~ 200 [100])*

Notes

Some of the information in this menu map is summarised. See the actual menu on the projector for full details.

The underlined text represents the factory default value for each setting.

Menu	Sub Menus
GEOMETRY	
	Aspect Ratio *16:9, TheaterScope, 4:3, 4:3 Narrow, 16:10, 5:4, Source*
	Overscan *Off, Crop, Zoom*
	Keystone
	Horizontal Keystone *(slider, value range -350 ~ 350 [0])*
	Vertical Keystone *(slider, value range -200 ~ 200 [0])*
	Rotation
	Rotation Adjust *(slider, value range -20 ~ 20 [0])*
	Pincushion / Barrel
	Pincushion / Barrel Adjust *(slider, value range -100 ~ 100 [0])*
	Top Left Corner
	Top Left Corner Adjust
	Horizontal *(slider, value range -192 ~ 192 [0])*
	Vertical *(slider, value range -120 ~ 120 [0])*
	Top Right Corner
	Top Right Corner Adjust
	Horizontal *(slider, value range -192 ~ 192 [0])*
	Vertical *(slider, value range -120 ~ 120 [0])*
	Bottom Left Corner
	Bottom Left Corner Adjust
	Horizontal *(slider, value range -192 ~ 192 [0])*
	Vertical *(slider, value range -120 ~ 120 [0])*
	Bottom Right Corner
	Bottom Right Corner Adjust
	Horizontal *(slider, value range -192 ~ 192 [0])*
	Vertical *(slider, value range -120 ~ 120 [0])*
	Reset *(command)*
	Blanking
	Top *(slider, value range -360 ~ 360 [0])*
	Bottom *(slider, value range -360 ~ 360 [0])*
	Left *(slider, value range -534 ~ 534 [0])*
	Right *(slider, value range -534 ~ 534 [0])*
	Reset *(command)*

Notes

Some of the information in this menu map is summarised. See the actual menu on the projector for full details.

The underlined text represents the factory default value for each setting.

Menu	Sub Menus
EDGE BLEND	
	Edge Blend *Off, On*
	Align Pattern *Off, On*
	Blend Width
	Top *(slider, value range 0, 200 ~ 500)*
	Bottom *(slider, value range 0, 200 ~ 500)*
	Left *(slider, value range 0, 200 ~ 800)*
	Right *(slider, value range 0, 200 ~ 800)*
	Black Level Uplift
	Top *0, 8, 16, 24, 32*
	Bottom *0, 8, 16, 24, 32*
	Left *0, 8, 16, 24, 32*
	Right *0, 8, 16, 24, 32*
	All *(slider, value range 0 ~ 32 [0])*
	Red *(slider, value range 0 ~ 32 [0])*
	Green *(slider, value range 0 ~ 32 [0])*
	Blue *(slider, value range 0 ~ 32 [0])*
	Reset *(command)*
3D	
	3D Format *Off, Auto, Side by Side (Half), Top and Bottom, Dual-Pipe*
	3D Swap *Normal, Reverse*
	Dark Time *0.65 ms, 1.3 ms, 1.95 ms, 2.5 ms*
	Sync Offset *(slider, value range 0~ 200 [100])*
LASER	
	Power Mode *Eco, Normal, Custom, Quiet*
	Custom Power Level *(slider, value range 1~ 28 [28])*
	High Altitude *Off, On*
	Laser Status *(information only)*
	Laser Hours *(information only)*

Notes

Some of the information in this menu map is summarised. See the actual menu on the projector for full details.

The underlined text represents the factory default value for each setting.

Menu	Sub Menus
SETUP	
	Orientation *Desktop Front, Ceiling Front, Desktop Rear, Ceiling Rear*
	Auto Power Off *Off, On*
	Auto Power On *Off, On*
	Startup Logo *Off, On*
	Blank Screen *Logo, Black, Blue, White*
	Trigger 1 *Screen, 16:9, TheaterScope, 4:3, 4:3 Narrow, RS232*
	Trigger 2 *Screen, 16:9, TheaterScope, 4:3, 4:3 Narrow, RS232*
	Auto-Source *Off, On*
	Infrared Remote
	IR Enable *Off, On*
	IR Code *(numeric input, two digits)*
	IR Code Reset *(command)*
	Network
	DHCP *Off, On*
	IP Address *(numeric input, IP address format)*
	Subnet Mask *(numeric input, IP address format)*
	Gateway *(numeric input, IP address format)*
	DNS *(numeric input, IP address format)*
	Apply Settings *(command)*
	Standby Power *Off, On*
	LAN Status *(informatiojn only)*
	MAC *(information only)*
	On Screen Display
	Position *Top-Left, Top-Right, Bottom-Left, Bottom-Right, Center*
	Transparency *0%, 25%, 50%, 75%*
	Timeout *Always On, 10 Seconds, 30 Seconds, 60 Seconds*
	Messaging *Off, On*
	Presets
	Recall Preset *Preset A, Preset B, Preset C, Preset D, Default*
	Save Preset *Preset A, Preset B, Preset C, Preset D*

Notes

Some of the information in this menu map is summarised. See the actual menu on the projector for full details.

The underlined text represents the factory default value for each setting.

Menu	Sub Menus
INFORMATION	
	Model Name *(information only)*
	Serial Number *(information only)*
	Software Version 1 *(information only)*
	Software Version 2 *(information only)*
	FPGA Version *(information only)*
	Active Source *(information only)*
	Signal Format *(information only)*
	Laser Hours *(information only)*
	Factory Reset *(command, opens a confirmation dialog)*

Notes

Some of the information in this menu map is summarised. See the actual menu on the projector for full details.

The underlined text represents the factory default value for each setting.

Do NOT reset the settings unless you are sure that you want to restore ALL the current settings to their factory defaults.

Appendix E: Wiring Details

Signal inputs and outputs

VGA

15 way D-type connector

1	R
2	G
3	B
4	unused
5	Digital Ground (H Sync)
6	R Ground
7	B Ground
8	G Ground
9	+5V
10	Digital Ground (V Sync/DDC)
1	unused
12	SDA
13	H Sync
14	V Sync
15	SCL

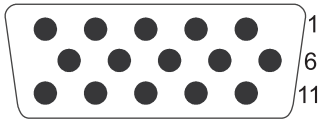

VGA: pin view of female connector

Notes

HDMI 1 and 2

19 way type A connector

1	TMDS Data 2+
2	TMDS Data 2 Shield
3	TMDS Data 2-
4	TMDS Data 1+
5	TMDS Data 1 Shield
6	TMDS Data 1-
7	TMDS Data 0+
8	TMDS Data 0 Shield
9	TMDS Data 0-
10	TMDS Clock+
11	TMDS Clock Shield
12	TMDS Clock-
13	CEC
14	not connected
15	SCL (DDC Clock)
16	SCA (DDC Data)
17	DDC/CEC Ground
18	+5 V Power
19	Hot Plug Detect

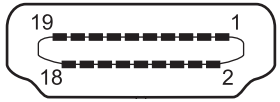

HDMI: pin view of panel connector

Notes

DVI

24 way D-type connector

Pin 1	TMDS data 2−	Digital red− (link 1)
Pin 2	TMDS data 2+	Digital red+ (link 1)
Pin 3	TMDS data 2/4 shield	
Pin 4	TMDS data 4−	Digital green− (link 2)
Pin 5	TMDS data 4+	Digital green+ (link 2)
Pin 6	DDC clock	
Pin 7	DDC data	
Pin 8	Analog vertical sync	
Pin 9	TMDS data 1−	Digital green− (link 1)
Pin 10	TMDS data 1+	Digital green+ (link 1)
Pin 11	TMDS data 1/3 shield	
Pin 12	TMDS data 3-	Digital blue− (link 2)
Pin 13	TMDS data 3+	Digital blue+ (link 2)
Pin 14	+5 V	Power for monitor when in standby
Pin 15	Ground	Return for pin 14 and analog sync
Pin 16	Hot plug detect	
Pin 17	TMDS data 0−	Digital blue− (link 1) and digital sync
Pin 18	TMDS data 0+	Digital blue+ (link 1) and digital sync
Pin 19	TMDS data 0/5 shield	
Pin 20	TMDS data 5−	Digital red− (link 2)
Pin 21	TMDS data 5+	Digital red+ (link 2)
Pin 22	TMDS clock shield	
Pin 23	TMDS clock+	Digital clock+ (links 1 and 2)
Pin 24	TMDS clock−	Digital clock− (links 1 and 2)
C1	Analog red	
C2	Analog green	
C3	Analog blue	
C4	Analog horizontal sync	
C5	Analog ground	Return for R, G, and B signals

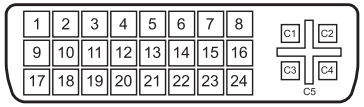

DVI: pin view of female connector

Notes

High-bandwidth Digital Content Protection (HDCP) is supported on this input.

3G-SDI In, 3G-SDI Out

75 ohm BNC

3G-SDI connector

Component 1

3 x RCA Phono connector

Component 1:
3 x RCA Phono connector

Component 2

3 x 75 ohm BNC connector

RGsB	YCbCr	YPbPr
R	Cr	Pr
G + Sync	G	Y
B	Cb	Pb

Component 2:
3 x 75 ohm BNC connector

HDBaseT input

RJ45 socket.

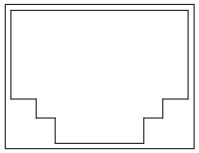

HDBaseT input

Notes

3G-SDI signals are very high speed digital signals which require better quality coaxial cable than conventional analogue video. The data rate is 3 Gigabits per second.

In choosing cable length and connectors for any installation the frequency response loss in decibels should be proportional to √f, from 1 MHz, to 3 GHz.

High-bandwidth Digital Content Protection (HDCP) is supported on this input.

Control connections

LAN

RJ45 socket

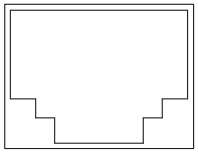

Update port

RS232

9 way D-type connector

1 unused

2 Received Data (RX)

3 Transmitted Data (TX)

4 unused

5 Signal Ground

6 unused

7 unused

8 unused

9 unused

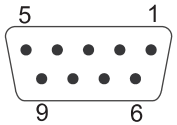

RS232:
pin view of female connector

Notes

Only one remote connection (RS232 or LAN) should be used at any one time.

Trigger 1 & Trigger 2

3.5 mm mini jack

Tip	Signal
Sleeve	Ground

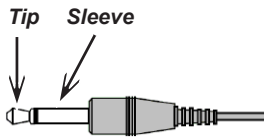

IR input

3.5 mm mini jack

Tip	Signal
Ring	Not connected
Sleeve	Ground

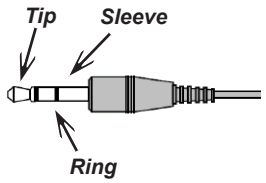

USB

USB type A socket

Pin 1	VCC (+5 V)
Pin 2	Data−
Pin 3	Data+
Pin 4	Ground

USB port:
pin view of female connector

3D Sync IN and 3D Sync OUT

75 ohm BNC

pin view of female connector

Notes

Appendix F: Glossary Of Terms

Notes

1080p

An ***HDTV resolution*** which corresponds to 1920 x 1080 ***pixels*** (a widescreen ***aspect ratio*** of 16:9).

3D active glasses

Wireless battery-powered glasses with LCD shutters. Synchronization information is communicated to the glasses by means of an infrared (IR) or radio frequency (RF) emitter which is connected to the Sync Out terminal on the projector. IR or RF pulses are transmitted by the emitter to signal when the left eye and right eye images are being displayed. The glasses incorporate a sensor which detects the emitter's signal and synchronises the left and right eye shutters with the projected image.

3D passive glasses

Passive glasses do not require a power source to work. Light with left-hand polarisation can pass through the left lens and light with right-hand polarisation can pass through the right-hand lens. These glasses are used in conjunction with another device which polarizes the image, such as a ***ZScreen***.

Adjust lines

A pattern applied to the image where its edge is to be blended with another image. Adjust lines are used to position the projectors in the array during the ***edge blend*** process.

Anamorphic lens

A special lens which, when used with the ***TheaterScope aspect ratio***, allows watching 2.35:1 content packed in a 16:9 source.

Aperture

The opening of the lens that determines the angle through which light travels to come into focus.

Aspect ratio

The proportional relationship between the width and the height of the projected image. It is represented by two numbers separated by a colon, indicating the ratio of image width and height respectively: for example, 16:9 or 2.35:1.

Not to be confused with ***resolution***.

Blanking (projection)

The ability to intentionally turn off, that is, set to black, areas around the edges of the projected image. It is sometimes referred to as “curtains” since it can be used to blank an area of image that literally falls on the curtains at the side of the screen in a movie theater. Usually no image resizing or geometric correction takes place and the “blanked” part of the image is lost.

Not to be confused with horizontal and vertical ***blanking (video signal)***.

Blanking (video signal)

The section of the video signal where there is no active video data.

Not to be confused with ***blanking (projection)***.

Blend region

The area of the image that is to overlap with another image in an ***edge blend*** setup. Sometimes called *overlapping region*.

Brightness (electronic control)

A control which adds a fixed intensity value to every ***pixel*** in the display, moving the entire range of displayed intensities up or down, and is used to set the black point in the image (see ***Contrast***). In ***Component Video*** signals, brightness is the same as ***luminance***.

Brightness (optical)

Describes how ‘bright’ an image that is projected onto a screen appears to an observer.

C

See ***Chrominance***.

Notes

Chrominance

Also known as '*C*', this is the component, or pair of components, of a *Component Video* signal which describes *color difference* information.

Color difference

In *Component Video* signals, the difference between specified colors and the *luminance* component. Color difference is zero for monochrome images.

Color gamut

The spectrum of color available to be displayed.

Color temperature

The position along the black body curve on the chromaticity diagram, normally quoted in Kelvin. It takes into account the preset values for color balance in the service set-up to take up the variations in the prism. The projector allows you to adjust this temperature (i.e. adjust the picture color temperature).

Component video

A three-wire or four-wire video interface that carries the signal split into its basic *RGB* components or *luminance (brightness)* and two-*color-difference* signals (*YUV*) and *synchronization* signals.

Contrast (electronic control)

The adjustment of the white point of the image without affecting the black point. This increases the intensity range of the displayed image.

Contrast (optical)

The intensity difference between the darkest and lightest areas of the screen.

Cr, Cb

Color difference signals used with '*Y'* for digital *Component Video* inputs. They provide information about the signal color. Not to be confused with *Pr, Pb*.

Notes

Crop

Remove part of the projected image.

Alternatively, fit an image into a frame with a different ***aspect ratio*** by removing part of the image. The image is resized so that either its length or its width equals the length or width of the frame, while the other dimension has moved outside the frame; the excess area is then cut out.

Dark time

The time inserted between ***frames*** when using ***3D active glasses***, to avoid ***ghosting*** caused by switching time between left and right eye.

DDC (Display Data Channel)

A communications link between the source and projector. DDC is used on the HDMI, DVI and VGA inputs. The link is used by the source to read the ***EDID*** stored in the projector.

Deinterlacing

The process of converting ***interlaced*** video signals into ***progressive*** ones.

DHCP (Dynamic Host Configuration Protocol)

A network protocol that is used to configure network devices so that they can communicate on an IP network, for example by allocating an IP address.

DMD™ (Digital Micromirror Device™)

The optical tool that transforms the electronic signal from the input source into an optical image projected on the screen. The DMD™ of a projector has a fixed ***resolution***, which affects the ***aspect ratio*** of the projected image.

A Digital Micromirror Device™ (DMD™) consists of moving microscopic mirrors. Each mirror, which acts as a ***pixel***, is suspended between two posts by a thin torsion hinge. It can be tilted to produce either a bright or dark pixel.

Edge blend

A method of creating a combined image by blending the adjoining edges of two or more individual images.

Notes

Edge tear

An artifact observed in ***interlaced video*** where the screen appears to be split horizontally. Edge tears appear when the video feed is out of sync with the refresh rate of the display device.

EDID (Extended Display Identification Data)

Information stored in the projector that can be read by the source.

EDID is used on the HDMI, DVI and VGA inputs, allowing the source to automatically configure to the optimum display settings.

EDTV (Enhanced Definition Television)

A ***progressive*** digital television system with a lower resolution than ***HDTV***.

Field

In ***interlaced video***, a part of the image ***frame*** that is scanned separately. A field is a collection of either all the odd lines or all the even lines within the frame.

Frame

One of the many still images displayed in a sequence to create a moving picture. A frame is made of horizontal lines of ***pixels***. For example, a 1920x1080 frame consists of 1080 lines, each containing 1920 pixels. In analog video frames are scanned one at a time (***progressive scanning***) or split into ***fields*** for each field to be scanned separately (***interlaced video***).

Frame rate

The number of ***frames*** shown per second (fps). In TV and video, a frame rate is the rate at which the display device scans the screen to “draw” the frame.

Frame rate multiplication

To stop low ***frame rate*** 3D images from flickering, frame rate multiplication can be used, which increases the displayed frame rate by two or three times.

Notes

Gamma

A nonlinear operation used to code and decode ***luminance***. It originates from the Cathode Ray Tube technology used in legacy television sets.

Ghosting

An artifact in 3D image viewing. Ghosting occurs when an image intended for one eye is partially seen by the other eye.

Ghosting can be removed by optimizing the ***dark time*** and sync delay.

HDCP (High-bandwidth Digital Content Protection)

An encryption scheme used to protect video content.

HDTV (High Definition Television)

A television system with a higher ***resolution*** than ***SDTV*** and ***EDTV***. It can be transmitted in various formats, notably ***1080p*** and 720p.

Hertz (Hz)

Cycles per second.

Horizontal Scan Rate

The rate at which the lines of the incoming signal are refreshed. The rate is set by the horizontal ***synchronization*** from the source and measured in ***Hertz***.

Hs + Vs

Horizontal and vertical ***synchronization***.

Hue

The graduation (red/green balance) of color (applicable to ***NTSC***).

Notes

Interlacing

A method of updating the image. The screen is divided in two ***fields***, one containing every odd horizontal line, the other one containing the even lines. The fields are then alternately updated. In analog TV interlacing was commonly used as a way of doubling the refresh rate without consuming extra bandwidth.

Interleaving

The alternation between left and right eye images when displaying 3D.

LED (Light Emitting Diode)

An electronic component that emits light.

Letterboxing

Black margins at the top and bottom of the image. Letterboxing appears when a wider image is packed into a narrower ***frame*** without changing the original ***aspect ratio***.

Lumen

A photometric unit of radiant power. For projectors, it is normally used to specify the total amount of emitted visible light.

Luminance

Also known as '***Y***', this is the part of a ***Component Video*** signal which affects the brightness, i.e. the black and white part.

Noise

Electrical interference displayed on the screen.

NTSC (National Television Standards Committee)

The United States standard for television - 525 lines transmitted at 60 ***interlaced fields*** per second.

Notes

OSD (on-screen display)

The projector menus allowing you to adjust various settings.

Overlapping region

See ***blend region***.

PAL (Phase Alternate Line)

The television system used in the UK, Australia and other countries - 625 lines transmitted at 50 ***interlaced fields*** per second.

Pillarboxing

Black margins at the left and right of the image. Pillarboxing appears when a narrower image is packed into a wider ***frame*** without changing the ***aspect ratio***.

Pixel

Short for *Picture Element*. The most basic unit of an image. Pixels are arranged in lines and columns. Each pixel corresponds to a micromirror within the ***DMD™***; resolutions reflect the number of pixels per line by the number of lines. For example, a ***1080p*** projector contains 1080 lines, each consisting of 1920 pixels.

Pond of mirrors

Area around the periphery of the ***DMD™*** containing inactive mirrors. The pond of mirrors may cause artifacts, for example during the ***edge blending*** process.

Pr, Pb

Color difference signals used with '***Y'*** for analog ***Component Video*** inputs. They provide information about the signal color. Not to be confused with ***Cr, Cb***.

Primary colors

Three colors any two of which cannot be mixed to produce the third. In additive color television systems the primary colors are red, green and blue.

Notes

Progressive scanning

A method of updating the image in which the lines of each ***frame*** are drawn in a sequence, without ***interlacing***.

Pulldown

The process of converting a 24 fps film footage to a video ***frame rate*** (25 fps for ***PAL***/***SECAM***, 30 fps for ***NTSC***) by adding extra ***frames***. DP projectors automatically carry out reverse pulldown whenever possible.

Resolution

The number of ***pixels*** in an image, usually represented by the number of pixels per line and the number of lines (for example, 1920 x 1200).

RGB (Red, Green and Blue)

An uncompressed ***Component Video*** standard.

Saturation

The amount of color in an image.

Scope

An ***aspect ratio*** of 2.35:1.

SDTV (Standard Definition Television)

An ***interlaced*** television system with a lower ***resolution*** than ***HDTV***. For ***PAL*** and ***SECAM*** signals, the resolution is 576i; for ***NTSC*** it is 480i.

SECAM (Sequential Color with Memory)

The television system used in France, Russia and some other countries - 625 lines transmitted at 50 ***interlaced fields*** per second.

SX+

A display ***resolution*** of 1400 x 1050 pixels with a 4:3 screen ***aspect ratio***. (Shortened from *SXGA+*, stands for *Super Extended Graphics Array Plus*.)

Notes

Synchronization

A timing signal used to coordinate an action.

Test pattern

A still image specially prepared for testing a projection system. It may contain various combinations of colors, lines and geometric shapes.

TheaterScope

An ***aspect ratio*** used in conjunction with a special ***anamorphic lens*** to display 2.35:1 images packed into a 16:9 ***frame***.

Throw distance

The distance between the screen and the projector.

Throw ratio

The ratio of the ***throw distance*** to the screen width.

TRC (Throw ratio correction)

A special number used in calculating ***throw distances*** and ***throw ratios*** when the image does not fill the width of the ***DMD™***.

TRC is the ratio of the ***DMD™ aspect ratio*** to the image source aspect ratio:

$$TRC = \frac{DMD™\ aspect\ ratio}{Source\ aspect\ ratio}$$

TRC is only used in calculations if it is greater than 1.

UXGA

A display ***resolution*** of 1600 x 1200 ***pixels*** with a 4:3 screen ***aspect ratio***. (Stands for *Ultra Extended Graphics Array*.)

Notes

Vertical Scan Rate

The rate at which the ***frames*** of the incoming signal are refreshed. The rate is set by the vertical ***synchronization*** from the source and measured in ***Hertz***.

Vignetting

Optical cropping of the image caused by the components in the projection lens. This can happen if too much offset is applied when positioning the image using the lens mount.

Vista

An ***aspect ratio*** of 1.66:1.

WUXGA

A display ***resolution*** of 1920 x 1200 ***pixels*** with a 16:10 screen ***aspect ratio***. (Stands for Widescreen *Ultra Extended Graphics Array*.)

Y

This is the ***luminance*** input (***brightness***) from a ***Component Video*** signal.

YUV

See ***Pr, Pb***.

ZScreen

A special kind of light modulator which polarizes the projected image for 3D viewing. It normally requires that images are projected onto a silver screen. The ZScreen is placed between the projector lens and screen. It changes the polarization of the projected light and switches between left- and right-handed circularly polarized light at the field rate.

Notes

Technical Specifications

Digital Projection reserves the right to change product specifications without prior notice.

Models

The specifications on these pages refer to the following projector:

Series name
HIGHlite Laser WUXGA 3D

Color system: 3-chip DLP®

Display type: 3 x 0.67” DarkChip™ DMD™

DMD™ specification (native): 1920 x 1200 pixels, +/- 12° tilt angle

Fast transit pixels for smooth grayscale and improved contrast.

Notes

Inputs and outputs

Type	Connector	Qty
Video & Computer		
HDMI 1.4	HDMI	2
DVI-D	DVI	1
HDBaseT	RJ45	1
3G-SDI In	BNC	1
3G-SDI Out	BNC	1
VGA	15-pin D-Sub	1
Component Video	3 x BNC	1
Component Video	3 x RCA	1

Type	Connector	Qty
Communication & Control		
3D Sync Out	BNC	1
3D Sync In	BNC	1
LAN	RJ45	1
RS232	9-pin D-Sub	1
Wired Remote	3.5 mm Stereo Jack	1
12V Trigger	3.5 mm Stereo Jack	2
Service Port	USB Type A	1

Bandwidth

- 170 MHz on analog RGB
- 165 Megapixels per second on HDMI and DVI
- 297 Megapixels per second on Dual Link DVI

Remote control and keypad

- Addressable IR remote control, wireless and wired
- On-board keypad

Automation control

- RS232
- LAN

Color temperature

- User selectable from 3200 to 9300 K

Notes

Lenses

Detailed information about available lenses can be found in ***Appendix A: Lens Part Numbers***.

Further information about lens offsets can be found in ***Positioning The Image > Maximum offset range***.

Lens mount

- Motorised shift, zoom and focus.

Mechanical mounting

- Front/Rear Table
- Front/Rear Ceiling
- Adjustable Front/Rear Feet

Orientation

- **Table Top or Inverted:** Yes
- **Pointing Up:** Yes
- **Pointing Down:** Yes
- **Roll (Portrait):** Yes, within the workable angle

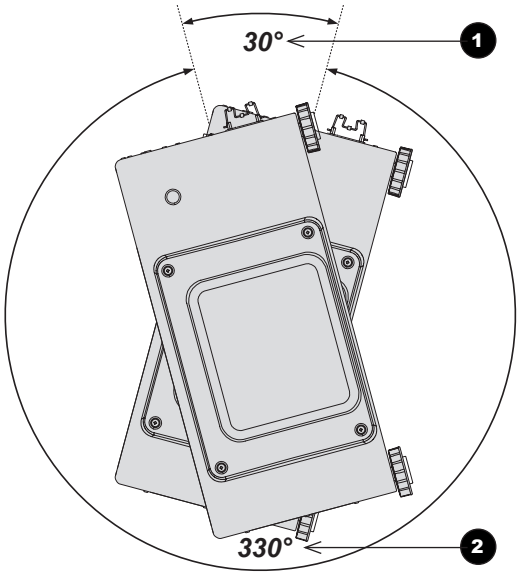

Roll

1 **Non-workable angle**

2 **Workable angle**

Notes

Information on lenses in this guide:

- ***Appendix A: Lens Part Numbers*** *- detailed descriptions of available lenses.*
- ***Maximum offset range*** *- lens offsets.*
- ***Choosing A Lens*** *- a step-by-step guide on calculating throw ratios.*
- ***Appendix B: Lens Charts*** *- quick reference charts depicting throw distances for commonly used aspect ratios.*

See also the lens calculator on the Digital Projector website.

Do not use the short lens hood with the long throw lens.

For further information about using the right lens and hood, see ***The lens hood*** *in the* ***Installation and Quick-Start Guide****.*

Electrical and physical specifications

- **Power requirements** 200-240 VAC, 50-60 Hz (single phase)
- **Power Consumption** 1600 W
- **Thermal Dissipation** 5027 BTU/hr
- **Fan Noise** 48 dBA
- **Operating Temperature** 0°C to 35°C (32 to 95F)
- **Storage Temperature** -20°C to 60°C (-4 to 140F)
- **Operating Humidity** 20% to 90% non-condensing
- **Weight** 46.5 kg (102.5 lbs)
- **Dimensions** H: 29.0 cm W: 55.2 cm L: 67.0 cm (88.7 cm with lens hood)
  H: 11.4 in W: 21.7 in L: 26.4 in (34.9 in with lens hood)

Safety & EMC regulations

- CE, FCC Class A, UL, CCC

Notes

Contact Information:

Digital Projection Limited

Greenside Way, Middleton
Manchester M24 1XX, UK

Registered in England No. 2207264
Registered Office: as above

Tel (+44) 161 947 3300
Fax (+44) 161 684 7674

enquiries@digitalprojection.co.uk
service@digitalprojection.co.uk

www.digitalprojection.co.uk

Digital Projection Inc.

55 Chastain Road, Suite 115
Kennesaw, GA 30144, USA

Tel (+1) 770 420 1350
Fax (+1) 770 420 1360

powerinfo@digitalprojection.com
www.digitalprojection.com

Digital Projection China

中国 北京市 朝阳区 芍药居北里101号
世奥国际中心A座2006室(100029)

Rm A2006
ShaoYaoJu 101 North Lane
Shi Ao International Center
Chaoyang District
Beijing 100029, PR CHINA

Tel (+86) 10 84888566
Fax (+86) 10 84888566-805

techsupport@dp-china.com.cn
www.dp-china.com.cn

Digital Projection Asia

16 New Industrial Road
#02-10 Hudson Technocentre
Singapore 536204

Tel (+65) 6284-1138
Fax (+65) 6284-1238

www.digitalprojectionasia.com